DRAWING INDEX

CP.01: COVER PAGE
KP.01: KEY PLAN

1.01: BOX BEAMS
2.01: RULON CEILING
3.01: CUPOLA
4.01: MOLDINGS & TRIM
5.01: BUFFET 111
6.01: SERVER STATION 103
7.01: SERVER STATION 112
8.01: MAIN BAR & INNER ISLAND
9.01: SUPENDED TV CANOPY
10.01: TELEVISION WALL

FINISH SCHEDULE

	MEL-1: WHITE MELAMINE COATED PARTICLEBOARD
	WD-1: PAINT GRADE LUMBER PRIMED
	WD-2: STAINED LUMBER PLEASE SPECIFY

HARDWARE SCHEDULE

	HW-01: DECORATIVE PULLS BY OTHERS
	HW-02: BLUM CLIP TOP 120° HINGE PRESS IN PART NO: 71T5580
	HW-03: KNAGE & VOGT 332 SERIES SHELF SUPPORT ANOCHROME FINISH
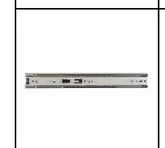	**HW-04:** KNAGE & VOGT 8400 SERIES DRAWER SLIDE FULL-EXTENSION BALL BEARING ANOCHROME FINISH
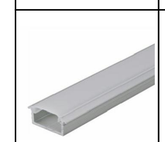	**HW-05:** HAFFELE RECESSED LIGHTING HARDWARE #833.72.865
	HW-06: HAFFELE FLOATING SHELF HARDWARE #283.33.904
	HDW-7: GROMMET 2" DIAMETER PART NO: PLEASE SPECIFY COLOR: BLACK

FINISH AND HARDWARE LEGEND

MEL-1	WHITE MELAMINE COATED PARTICLEBOARD					HW-1	PULLS - BY OTHERS	HW-4	KV8400 FULL EXTENSION DRAWER SLIDE	HW-7	GROMMET - 2"Ø
WD-1	PAINT GRADE - PRIMED					HW-2	BLUM CLIP TOP HINGE 110°	HW-5	RECESSED LIGHTING - #833.72.865		
WD-2	STAINED - PLEASE SPECIFY					HW-3	5MM METAL SHELF PIN	HW-6	FLOATING SHELF HARDWARE - #283.33.904		

SUPERIOR SHOP DRAWINGS
www.SuperiorShopDrawings.com
For Customer Review Only

SHADOW WOOD COUNTRY CLUB
22801 OAKWILDE BOULEVARD
BONITA SPRINGS, FL 34135

DATE
05/27/2019

REVISION

DRAWN BY
SSD

SCALE
AS NOTED

SHEET
CP

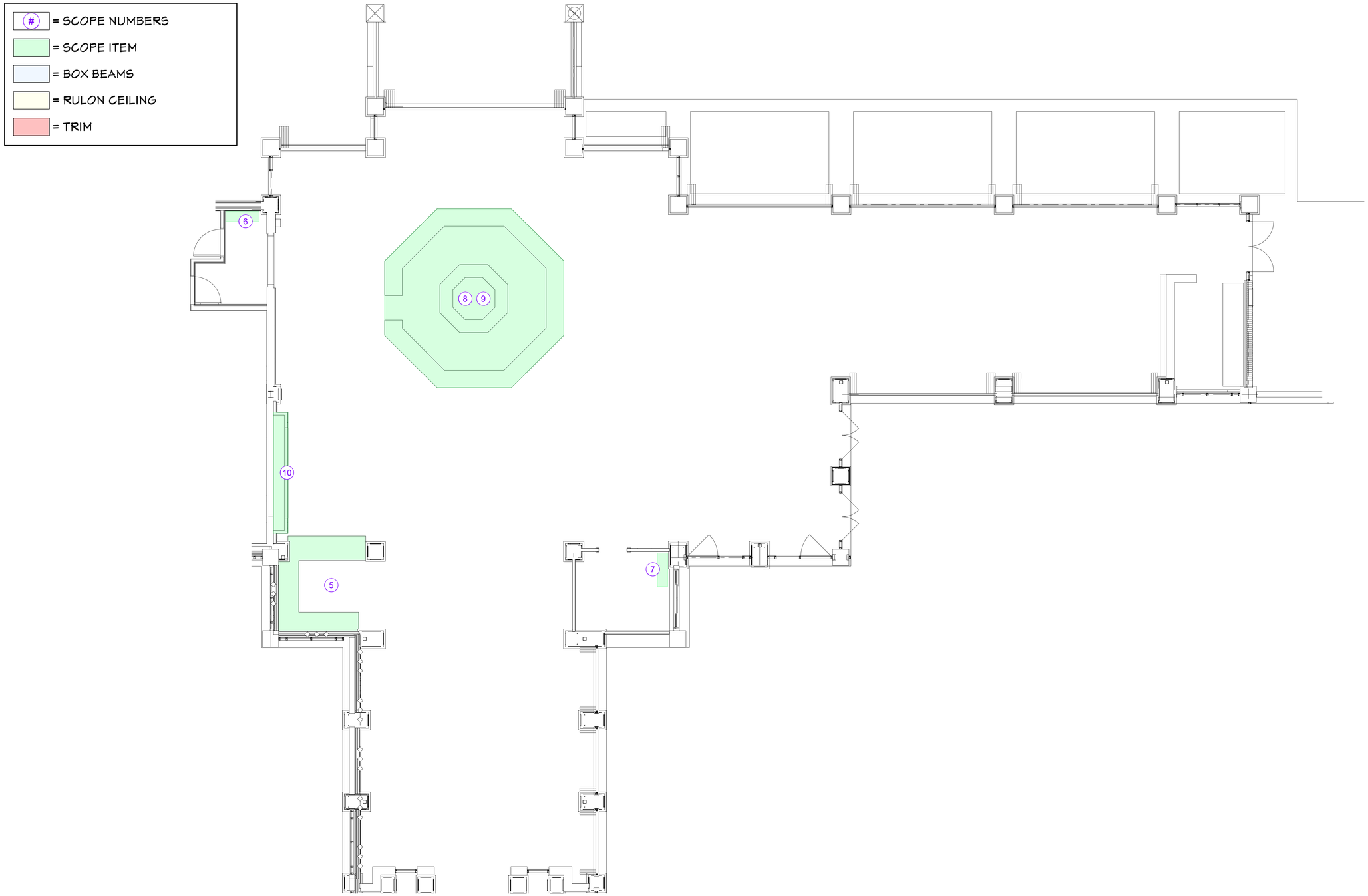

SUPERIOR SHOP DRAWINGS
www.SuperiorShopDrawings.com
For Customer Review Only

SHADOW WOOD COUNTRY CLUB

22801 OAKWILDE BOULEVARD
BONITA SPRINGS, FL 34135

DATE
05/27/2019

REVISION

DRAWN BY
SSD

SCALE
AS NOTED

SHEET
KP.1

FINISH AND HARDWARE LEGEND

MEL-1	WHITE MELAMINE COATED PARTICLEBOARD					HW-1	PULLS - BY OTHERS	HW-4	KV8400 FULL EXTENSION DRAWER SLIDE	HW-7	GROMMET - 2"Ø
WD-1	PAINT GRADE - PRIMED					HW-2	BLUM CLIP TOP HINGE 110°	HW-5	RECESSED LIGHTING - #833.72.865		
WD-2	STAINED - PLEASE SPECIFY					HW-3	5MM METAL SHELF PIN	HW-6	FLOATING SHELF HARDWARE - #283.33.904		

#	= SCOPE NUMBERS
	= SCOPE ITEM
	= BOX BEAMS
	= RULON CEILING
	= TRIM

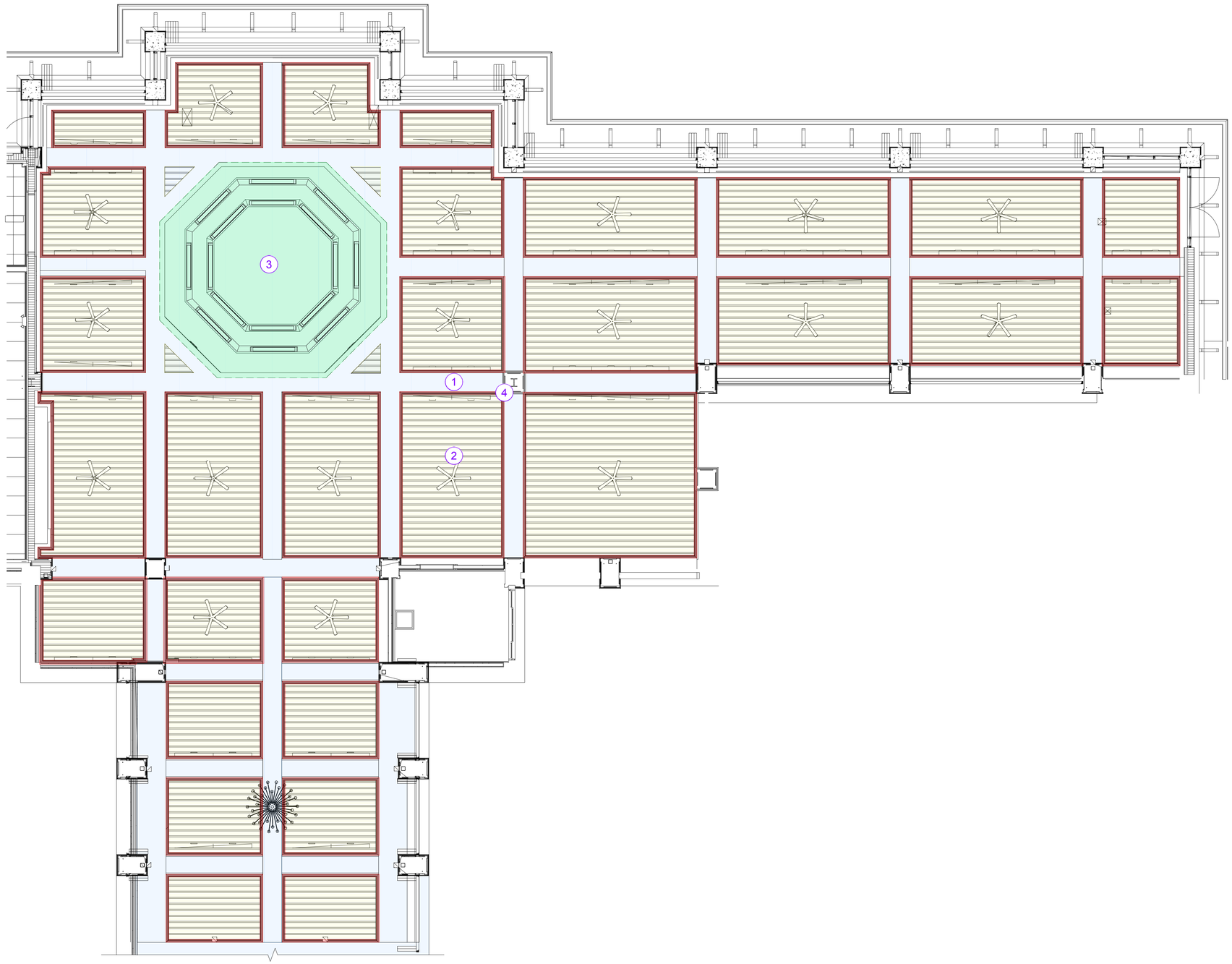

SUPERIOR SHOP DRAWINGS
www.SuperiorShopDrawings.com
For Customer Review Only

SHADOW WOOD COUNTRY CLUB

22801 OAKWILDE BOULEVARD
BONITA SPRINGS, FL 34135

DATE
05/27/2019

REVISION

DRAWN BY
SSD

SCALE
AS NOTED

SHEET
KP.2

FINISH AND HARDWARE LEGEND

MEL-1	WHITE MELAMINE COATED PARTICLEBOARD					HW-1	PULLS - BY OTHERS	HW-4	KV8400 FULL EXTENSION DRAWER SLIDE	HW-7	GROMMET - 2"Ø
WD-1	PAINT GRADE - PRIMED					HW-2	BLUM CLIP TOP HINGE 110°	HW-5	RECESSED LIGHTING - #833.72.865		
WD-2	STAINED - PLEASE SPECIFY					HW-3	5MM METAL SHELF PIN	HW-6	FLOATING SHELF HARDWARE - #283.33.904		

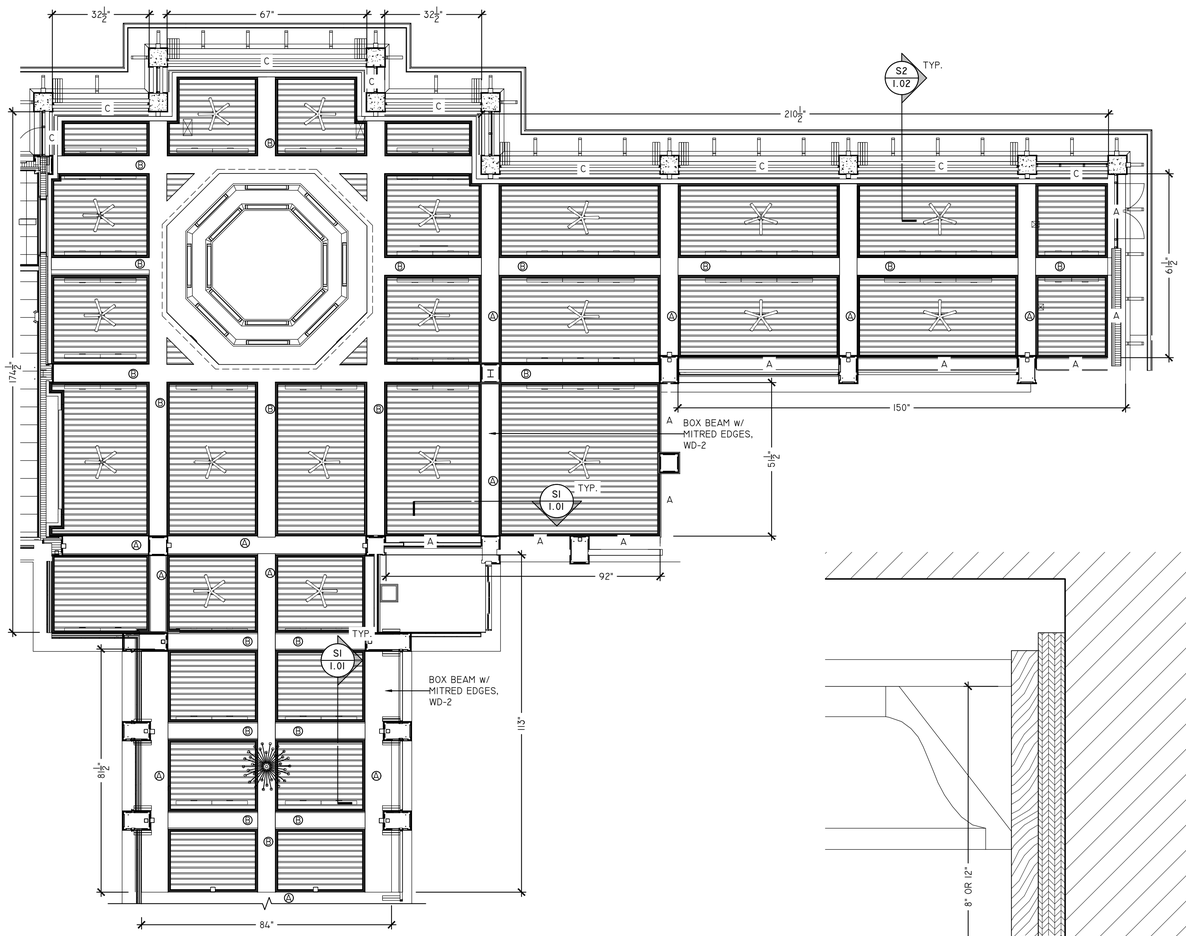

1 BAR 101 - RCP
SCALE: NTS
ARCH REF: 1/A-602

BOX BEAM HEIGHT SCHEDULE		
TYPE	HEIGHT ABOVE AFF	DETAIL
A	12'-4" AFF	S1/1.01
B	12'-8" AFF	S1/1.01
C	12'-4" AFF	S2/1.01

NOTE:
VERIFY LOCATIONS OF LIGHT FIXTURES, SPRINKLER HEADS AND HVAC DIFFUSERS. HOLES TO BE CUT IN FIELD.

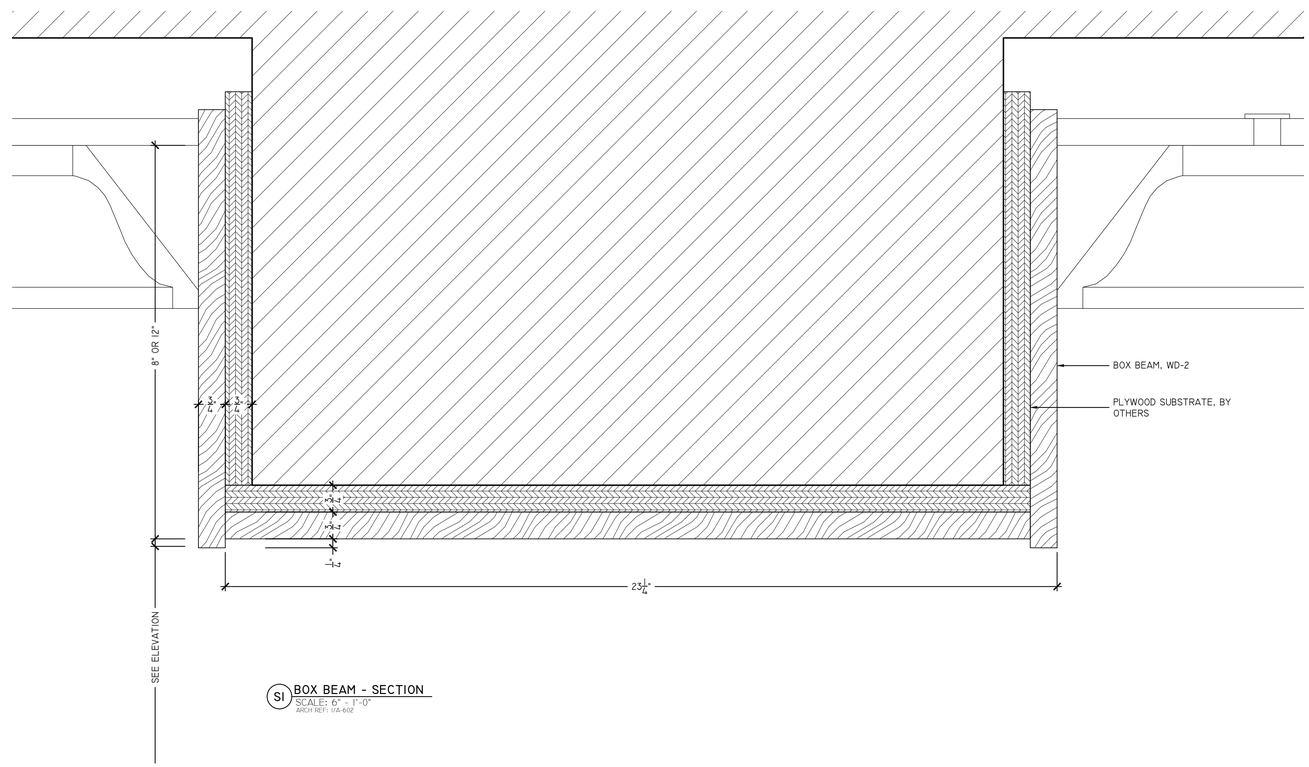

S1 BOX BEAM - SECTION
SCALE: 6" = 1'-0"
ARCH REF: 1/A-602

SUPERIOR SHOP DRAWINGS
www.SuperiorShopDrawings.com
For Customer Review Only

SHADOW WOOD COUNTRY CLUB

22801 OAKWILDE BOULEVARD
BONITA SPRINGS, FL 34135

DATE
05/27/2019

REVISION

DRAWN BY
SSD

SCALE
AS NOTED

SHEET
1.01

FINISH AND HARDWARE LEGEND

MEL-1	WHITE MELAMINE COATED PARTICLEBOARD					HW-1	PULLS - BY OTHERS	HW-4	KV8400 FULL EXTENSION DRAWER SLIDE	HW-7	GROMMET - 2"Ø
WD-1	PAINT GRADE - PRIMED					HW-2	BLUM CLIP TOP HINGE 110°	HW-5	RECESSED LIGHTING - #833.72.865		
WD-2	STAINED - PLEASE SPECIFY					HW-3	5MM METAL SHELF PIN	HW-6	FLOATING SHELF HARDWARE - #283.33.904		

NOTE:
VERIFY LOCATIONS OF LIGHT FIXTURES, SPRINKLER HEADS AND HVAC DIFFUSERS. HOLES TO BE CUT IN FIELD.

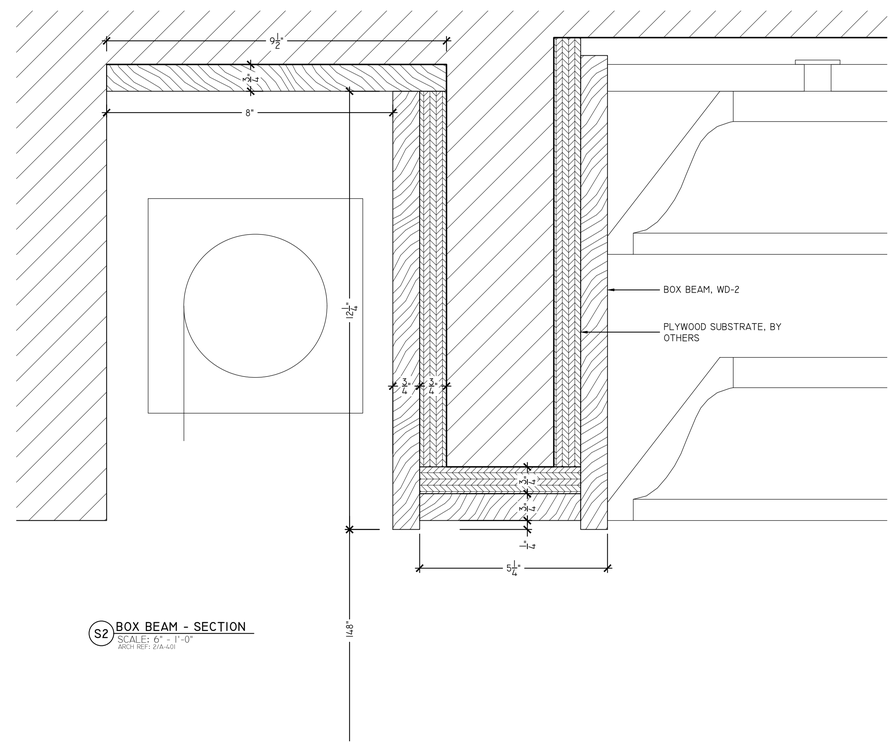

S2 BOX BEAM - SECTION
SCALE: 6" = 1'-0"
ARCH REF: 2/A-401

FINISH AND HARDWARE LEGEND

MEL-1	WHITE MELAMINE COATED PARTICLEBOARD					HW-1	PULLS - BY OTHERS	HW-4	KV8400 FULL EXTENSION DRAWER SLIDE	HW-7	GROMMET - 2"Ø
WD-1	PAINT GRADE - PRIMED					HW-2	BLUM CLIP TOP HINGE 110°	HW-5	RECESSED LIGHTING - #833.72.865		
WD-2	STAINED - PLEASE SPECIFY					HW-3	5MM METAL SHELF PIN	HW-6	FLOATING SHELF HARDWARE - #283.33.904		

SUPERIOR SHOP DRAWINGS
www.SuperiorShopDrawings.com
For Customer Review Only

SHADOW WOOD COUNTRY CLUB
22801 OAKWILDE BOULEVARD
BONITA SPRINGS, FL 34135

DATE
05/27/2019

REVISION

DRAWN BY
SSD

SCALE
AS NOTED

SHEET
1.02

NOTE:
VERIFY LOCATIONS OF LIGHT FIXTURES, SPRINKLER HEADS AND HVAC DIFFUSERS. HOLES TO BE CUT IN FIELD.

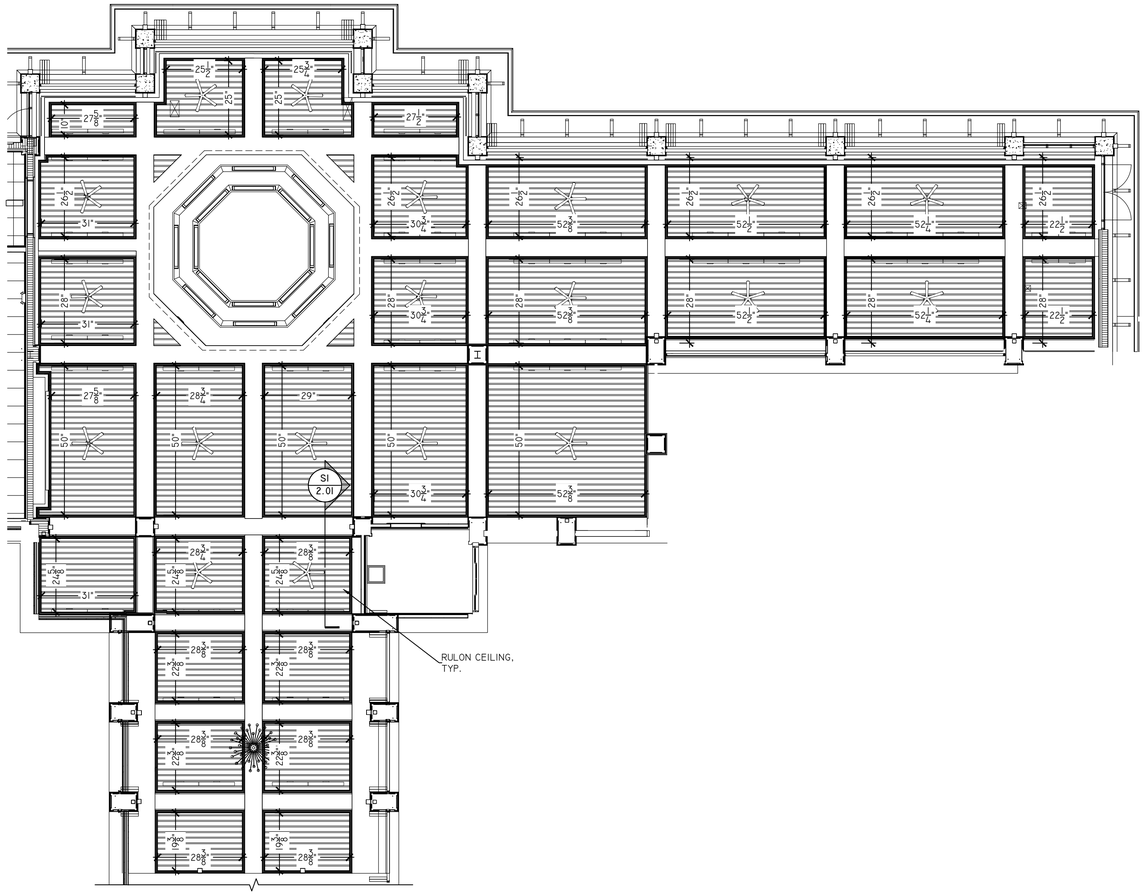

1 BAR 101 - RCP
SCALE: NTS
ARCH REF: 1/A-602

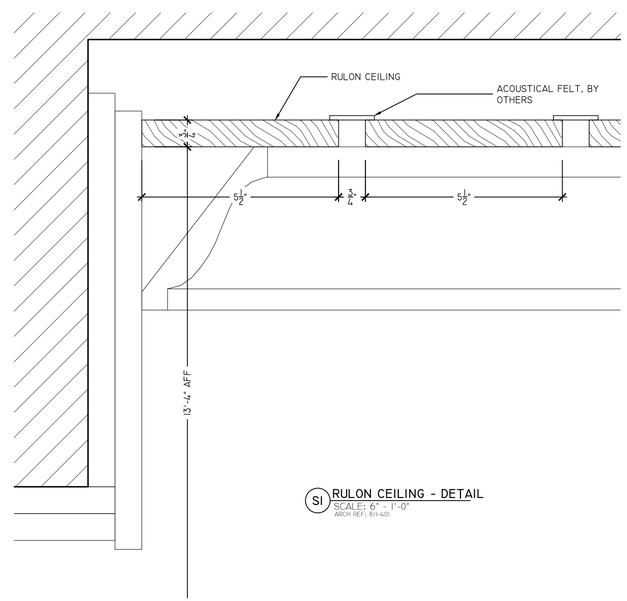

SI RULON CEILING - DETAIL
SCALE: 6" = 1'-0"
ARCH REF: 8/1-601

SUPERIOR SHOP DRAWINGS
www.SuperiorShopDrawings.com
For Customer Review Only

SHADOW WOOD COUNTRY CLUB

22801 OAKWILDE BOULEVARD
BONITA SPRINGS, FL 34135

DATE
05/27/2019

REVISION

DRAWN BY
SSD

SCALE
AS NOTED

SHEET
2.01

FINISH AND HARDWARE LEGEND

MEL-1	WHITE MELAMINE COATED PARTICLEBOARD					HW-1	PULLS - BY OTHERS	HW-4	KV8400 FULL EXTENSION DRAWER SLIDE	HW-7	GROMMET - 2"Ø
WD-1	PAINT GRADE - PRIMED					HW-2	BLUM CLIP TOP HINGE 110°	HW-5	RECESSED LIGHTING - #833.72.865		
WD-2	STAINED - PLEASE SPECIFY					HW-3	5MM METAL SHELF PIN	HW-6	FLOATING SHELF HARDWARE - #283.33.904		

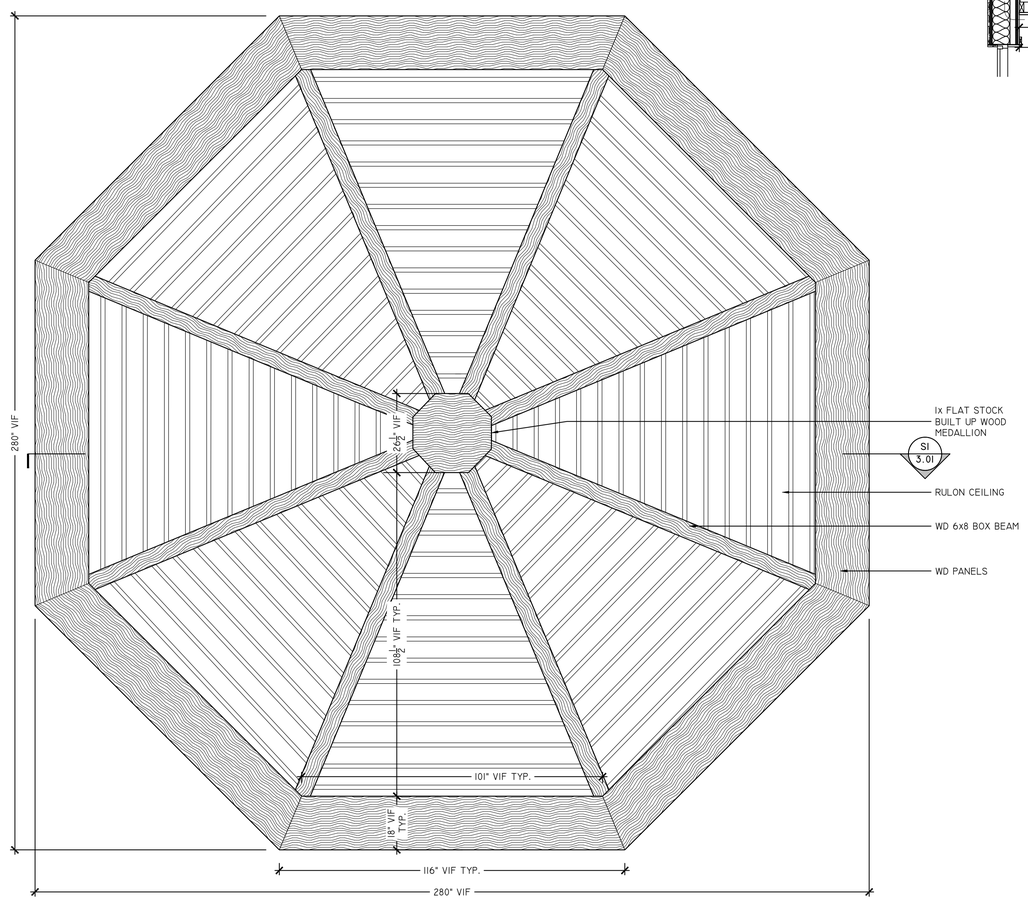

1 CUPOLA - PLAN
SCALE: 1/2" = 1'-0"
ARCH REF: 2/A-602

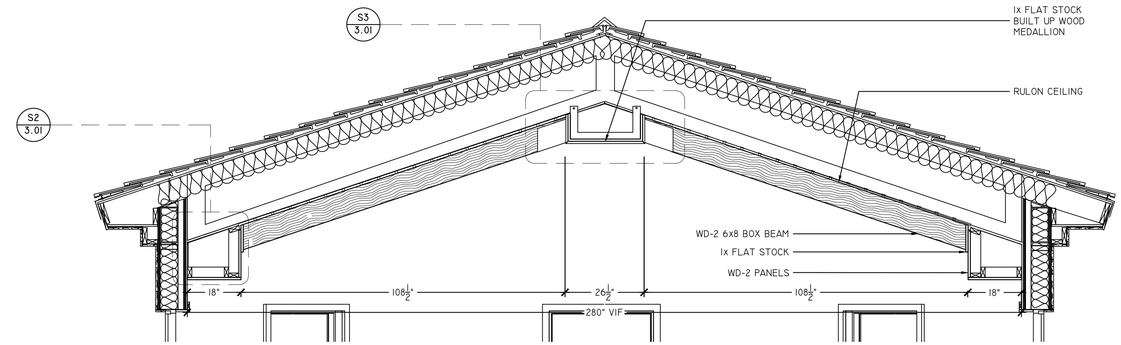

S1 CUPOLA - SECTION
SCALE: 1/2" = 1'-0"
ARCH REF: 1/A-602

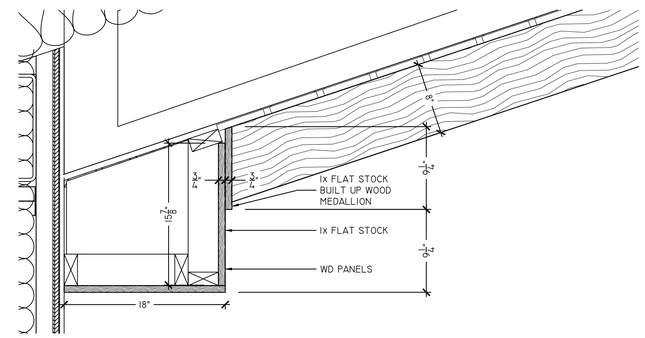

S2 CUPOLA - DETAIL
SCALE: 6" = 1'-0"
ARCH REF: 1/A-602

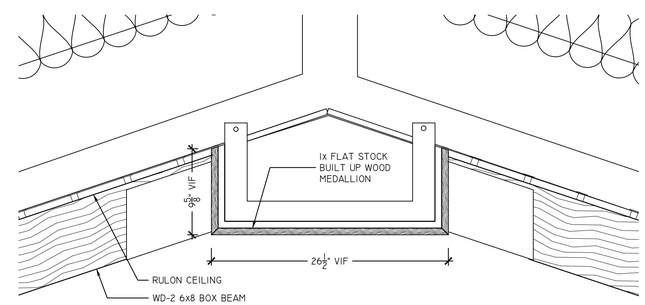

S3 CUPOLA - DETAIL
SCALE: 6" = 1'-0"
ARCH REF: 1/A-602

FINISH AND HARDWARE LEGEND

MEL-1	WHITE MELAMINE COATED PARTICLEBOARD					HW-1	PULLS - BY OTHERS	HW-4	KV8400 FULL EXTENSION DRAWER SLIDE	HW-7	GROMMET - 2"Ø
WD-1	PAINT GRADE - PRIMED					HW-2	BLUM CLIP TOP HINGE 110°	HW-5	RECESSED LIGHTING - #833.72.865		
WD-2	STAINED - PLEASE SPECIFY					HW-3	5MM METAL SHELF PIN	HW-6	FLOATING SHELF HARDWARE - #283.33.904		

SUPERIOR SHOP DRAWINGS
www.SuperiorShopDrawings.com
For Customer Review Only

SHADOW WOOD COUNTRY CLUB

22801 OAKWILDE BOULEVARD
BONITA SPRINGS, FL 34135

DATE
05/27/2019

REVISION

DRAWN BY
SSD

SCALE
AS NOTED

SHEET
3.01

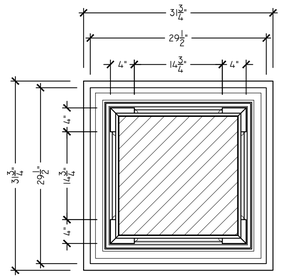

I TYPICAL COLUMN - PLAN
SCALE: 1" = 1'-0"
ARCH REF: M/1301

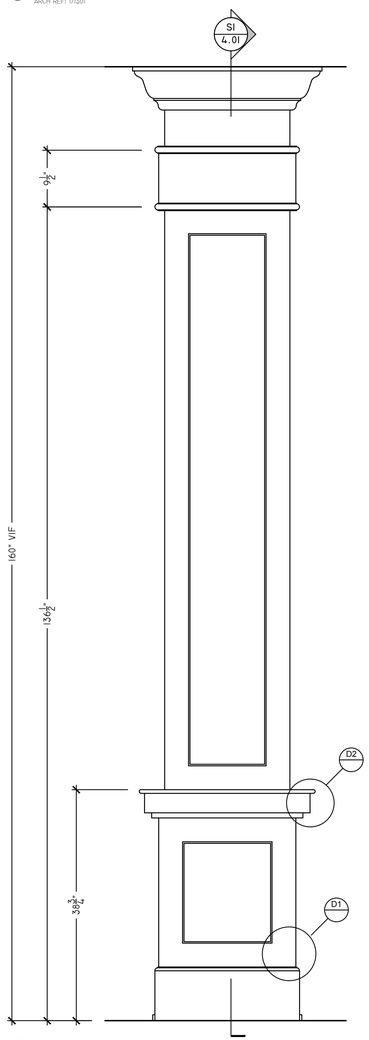

A TYPICAL COLUMN - ELEVATION
SCALE: 1" = 1'-0"
ARCH REF: 2/1301

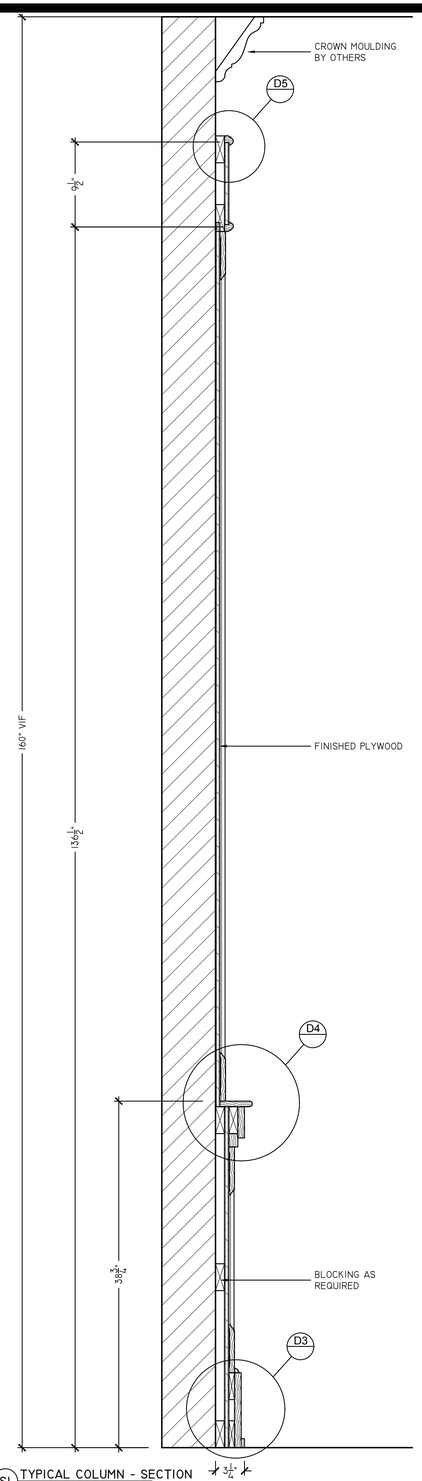

S1 TYPICAL COLUMN - SECTION
SCALE: 1-1/2" = 1'-0"
ARCH REF: 3/1301

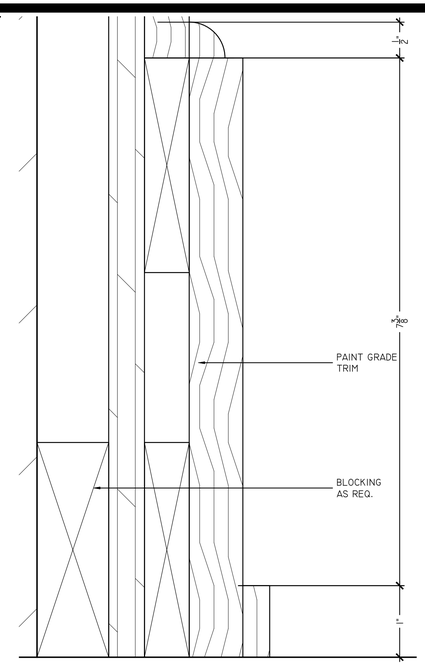

D3 TYPICAL COLUMN - DETAIL
SCALE: 1'-0" = 1'-0"
ARCH REF: 3/1301

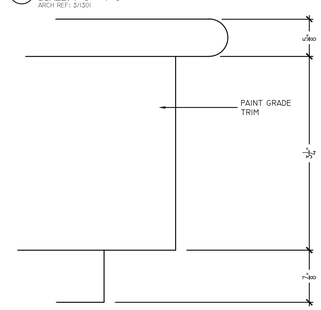

D2 TYPICAL COLUMN - DETAIL
SCALE: 1'-0" = 1'-0"
ARCH REF: 2/1301

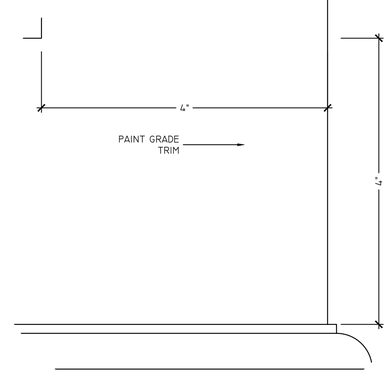

D1 TYPICAL COLUMN - DETAIL
SCALE: 1'-0" = 1'-0"
ARCH REF: 2/1301

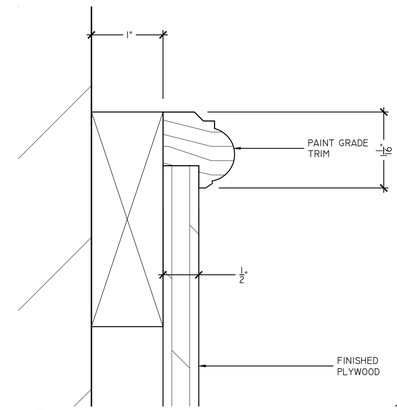

D5 TYPICAL COLUMN - DETAIL
SCALE: 1'-0" = 1'-0"
ARCH REF: 3/1301

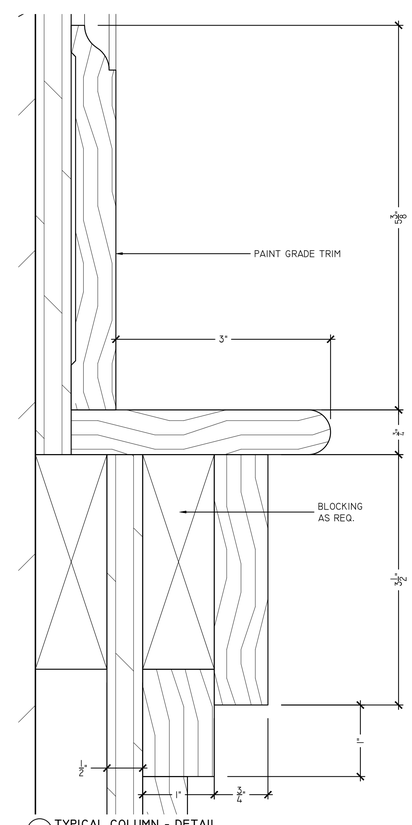

D4 TYPICAL COLUMN - DETAIL
SCALE: 1'-0" = 1'-0"
ARCH REF: 3/1301

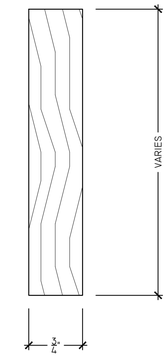

D8 TYPICAL TRIM - DETAIL
SCALE: 1'-0" = 1'-0"
ARCH REF: M/1301

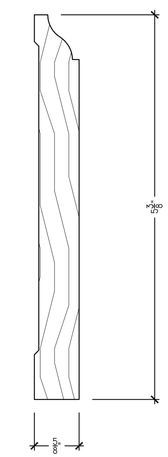

D7 TYPICAL TRIM - DETAIL
SCALE: 1'-0" = 1'-0"
ARCH REF: C/1301

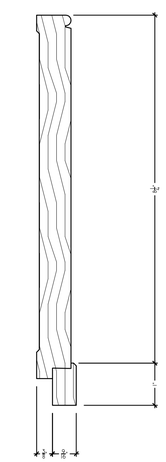

D6 TYPICAL TRIM - DETAIL
SCALE: 1'-0" = 1'-0"
ARCH REF: B/1301

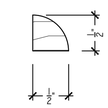

D11 TYPICAL TRIM - DETAIL
SCALE: 1'-0" = 1'-0"
ARCH REF: M2/1301

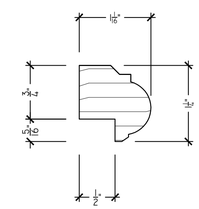

D10 TYPICAL TRIM - DETAIL
SCALE: 1'-0" = 1'-0"
ARCH REF: M4/1301

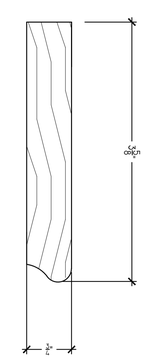

D9 TYPICAL TRIM - DETAIL
SCALE: 1'-0" = 1'-0"
ARCH REF: M3/1301

FINISH AND HARDWARE LEGEND

MEL-1	WHITE MELAMINE COATED PARTICLEBOARD					HW-1	PULLS - BY OTHERS	HW-4	KV8400 FULL EXTENSION DRAWER SLIDE	HW-7	GROMMET - 2"Ø
WD-1	PAINT GRADE - PRIMED					HW-2	BLUM CLIP TOP HINGE 110°	HW-5	RECESSED LIGHTING - #833.72.865		
WD-2	STAINED - PLEASE SPECIFY					HW-3	5MM METAL SHELF PIN	HW-6	FLOATING SHELF HARDWARE - #283.33.904		

SUPERIOR SHOP DRAWINGS
www.SuperiorShopDrawings.com
For Customer Review Only

SHADOW WOOD COUNTRY CLUB

22801 OAKWILDE BOULEVARD
BONITA SPRINGS, FL 34135

DATE
05/27/2019

REVISION

DRAWN BY
SSD

SCALE
AS NOTED

SHEET
4.01

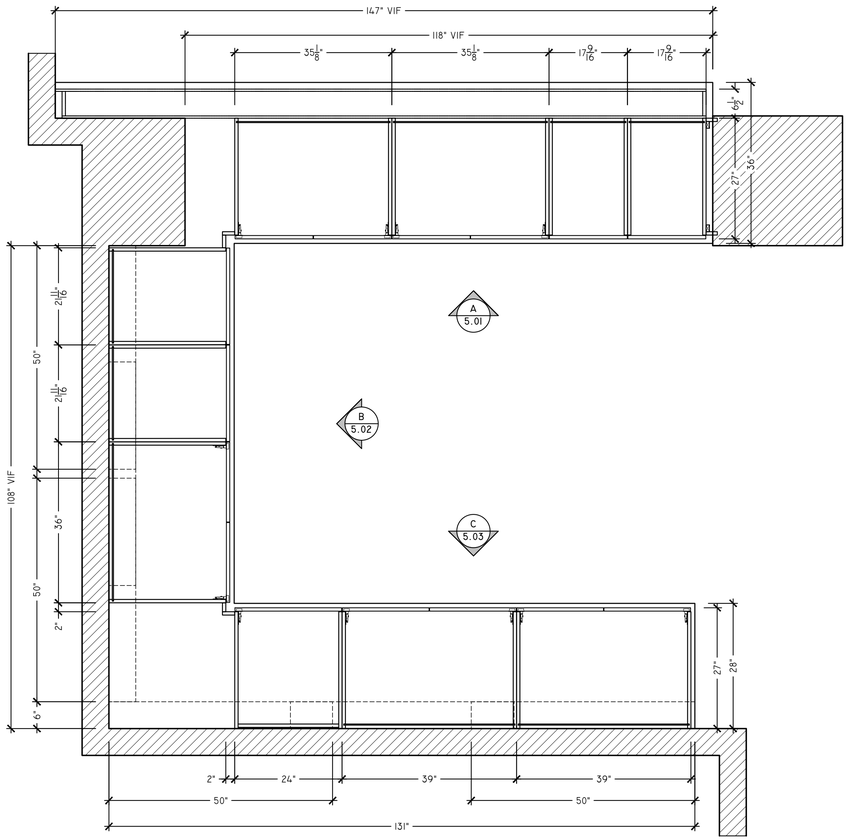

1 BUFFET III - PLAN
SCALE: 3/4" = 1'-0"
ARCH REF: 1/1101

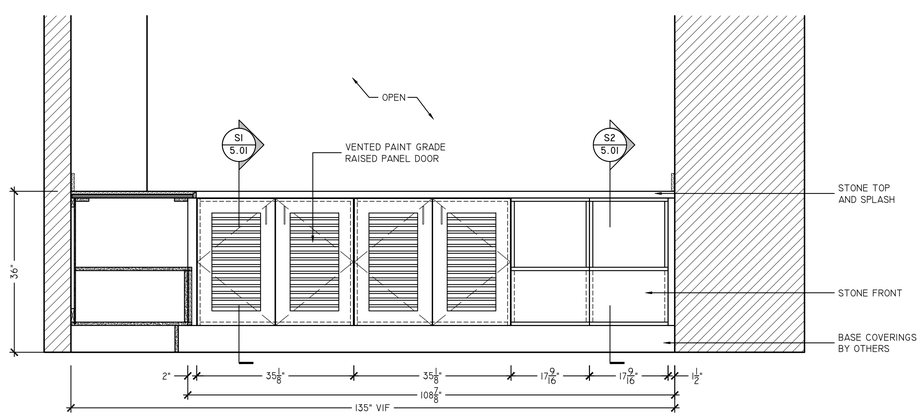

A BUFFET III - ELEVATION
SCALE: 3/4" = 1'-0"
ARCH REF: 5/1202

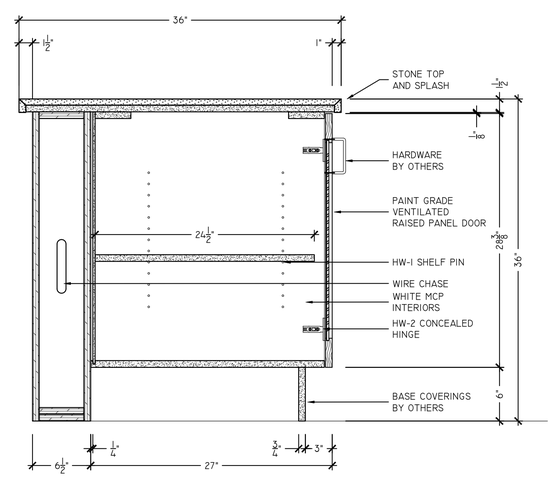

S1 BUFFET III - SECTION
SCALE: 1-1/2" = 1'-0"
ARCH REF: 6/1601

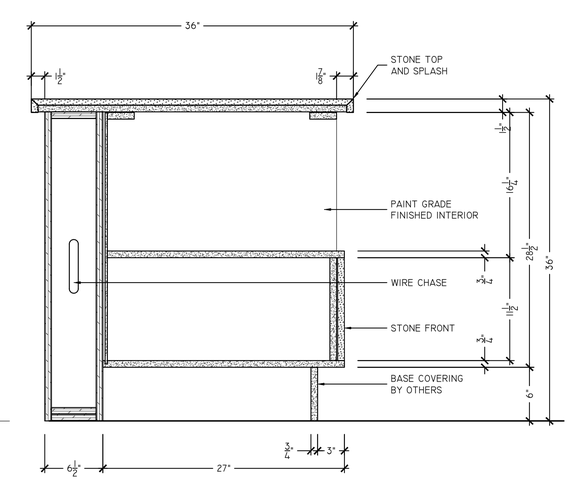

S2 BUFFET III - SECTION
SCALE: 1-1/2" = 1'-0"
ARCH REF: 6/1601

FINISH AND HARDWARE LEGEND

MEL-1	WHITE MELAMINE COATED PARTICLEBOARD					HW-1	PULLS - BY OTHERS	HW-4	KV8400 FULL EXTENSION DRAWER SLIDE	HW-7	GROMMET - 2"Ø
WD-1	PAINT GRADE - PRIMED					HW-2	BLUM CLIP TOP HINGE 110°	HW-5	RECESSED LIGHTING - #833.72.865		
WD-2	STAINED - PLEASE SPECIFY					HW-3	5MM METAL SHELF PIN	HW-6	FLOATING SHELF HARDWARE - #283.33.904		

SUPERIOR SHOP DRAWINGS
www.SuperiorShopDrawings.com
For Customer Review Only

SHADOW WOOD COUNTRY CLUB

22801 OAKWILDE BOULEVARD
BONITA SPRINGS, FL 34135

DATE
05/27/2019

REVISION

DRAWN BY
SSD

SCALE
AS NOTED

SHEET
5.01

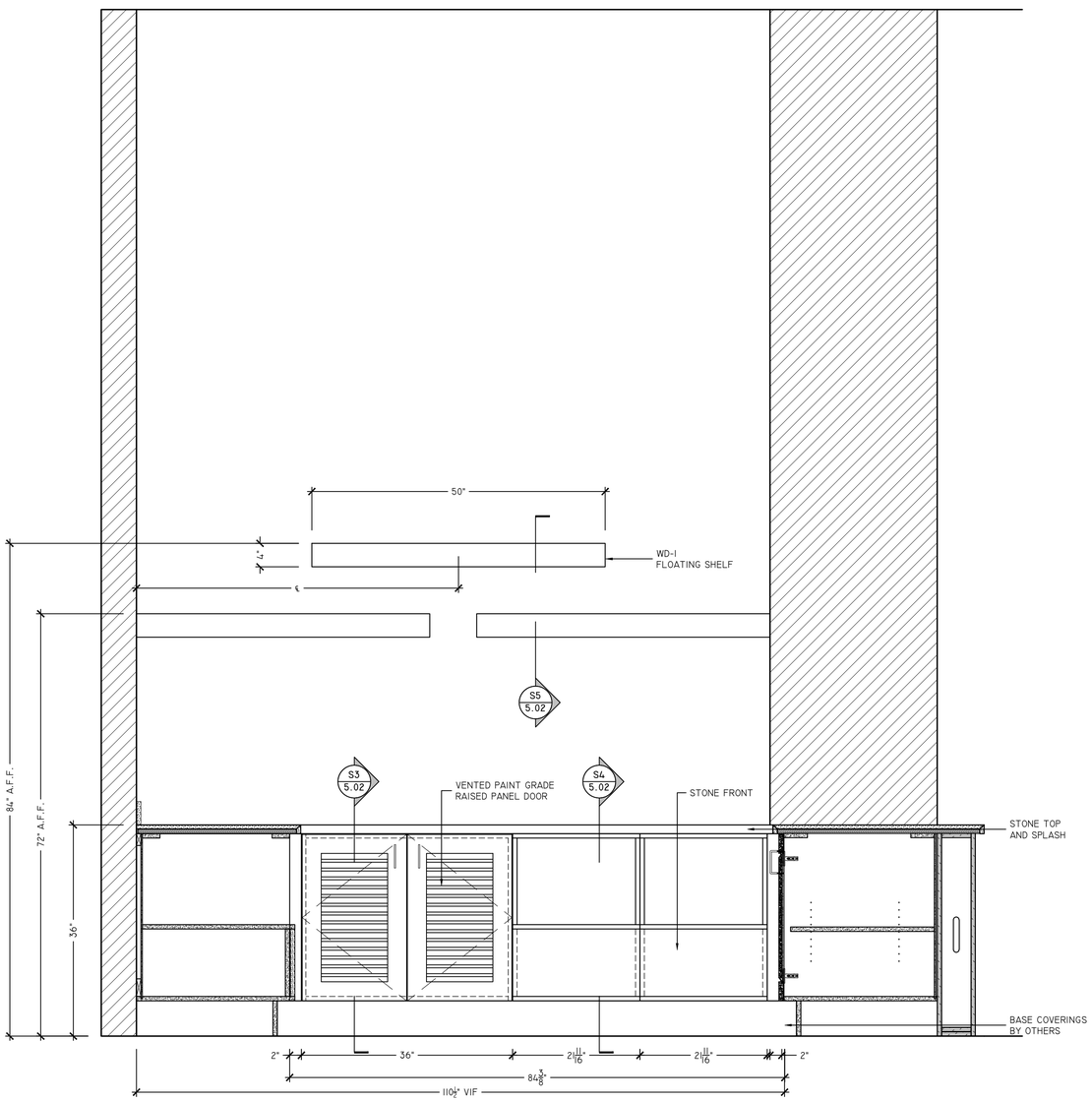

B BUFFFET III - PLAN
SCALE: 1" = 1'-0"
ARCH REF: 6/1202

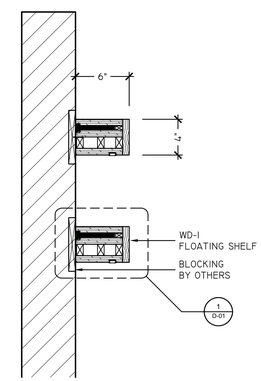

S5 BUFFET III - SECTION
SCALE: 1-1/2" = 1'-0"
ARCH REF: 6/1401

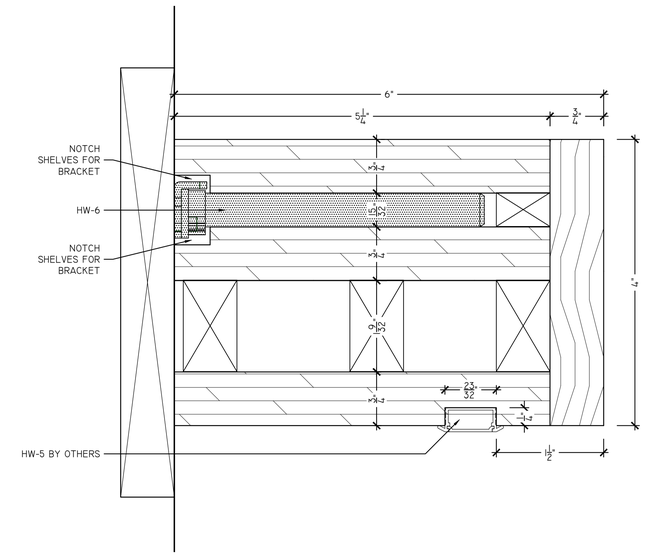

DI BUFFET III - DETAIL
SCALE: 1"-0" = 1"-0"
ARCH REF: NONE

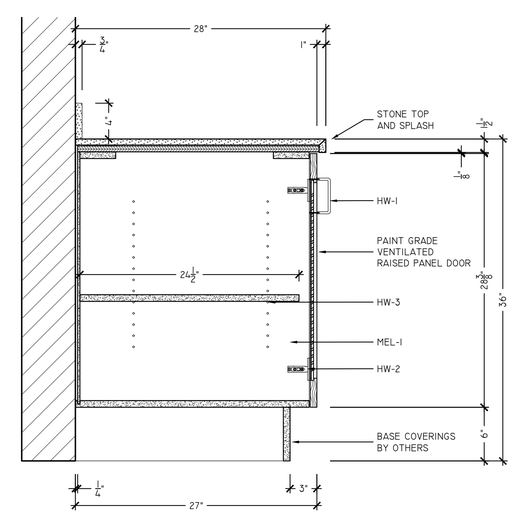

S3 BUFFET III - SECTION
SCALE: 1-1/2" = 1'-0"
ARCH REF: 6/1401

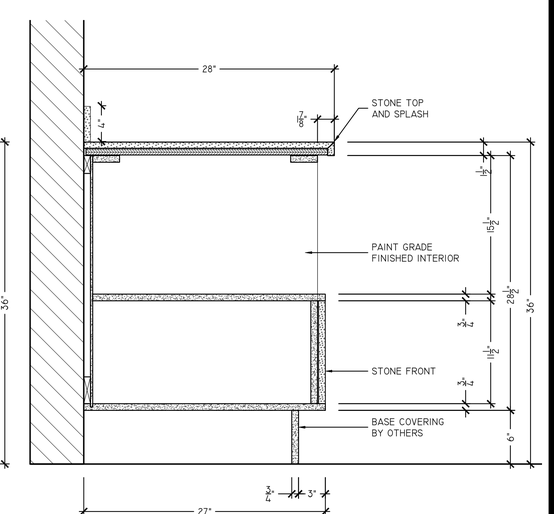

S2 BUFFET III - SECTION
SCALE: 1-1/2" = 1'-0"
ARCH REF: 6/1401

FINISH AND HARDWARE LEGEND

MEL-1	WHITE MELAMINE COATED PARTICLEBOARD					HW-1	PULLS - BY OTHERS	HW-4	KV8400 FULL EXTENSION DRAWER SLIDE	HW-7	GROMMET - 2"Ø
WD-1	PAINT GRADE - PRIMED					HW-2	BLUM CLIP TOP HINGE 110°	HW-5	RECESSED LIGHTING - #833.72.865		
WD-2	STAINED - PLEASE SPECIFY					HW-3	5MM METAL SHELF PIN	HW-6	FLOATING SHELF HARDWARE - #283.33.904		

SUPERIOR SHOP DRAWINGS
www.SuperiorShopDrawings.com
For Customer Review Only

SHADOW WOOD COUNTRY CLUB

22801 OAKWILDE BOULEVARD
BONITA SPRINGS, FL 34135

DATE
05/27/2019

REVISION

DRAWN BY
SSD

SCALE
AS NOTED

SHEET
5.02

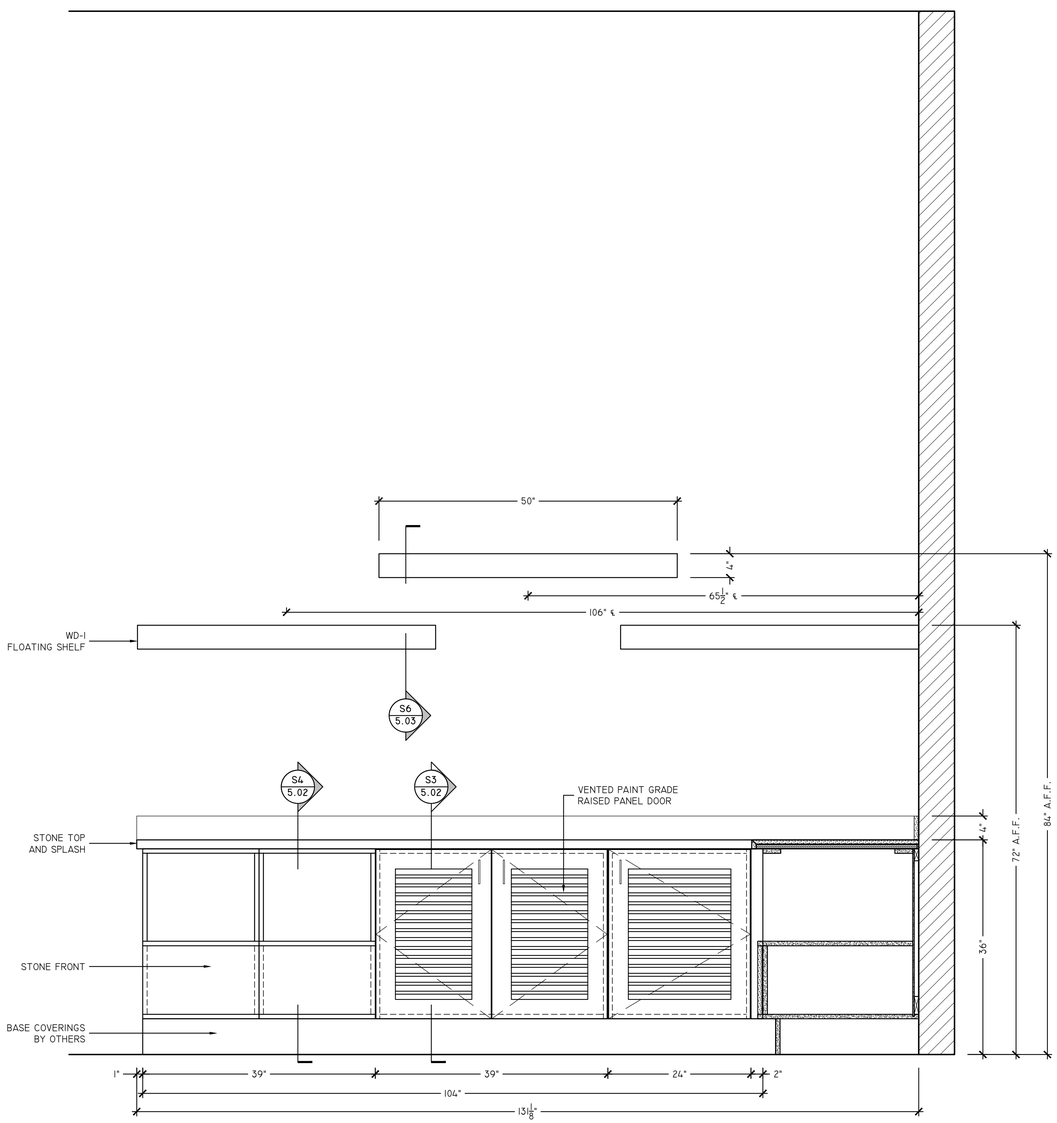

1 TECH BREAK ROOM 127 - PLAN
SCALE: 1" = 1'-0"
ARCH REF: I/A2.6A

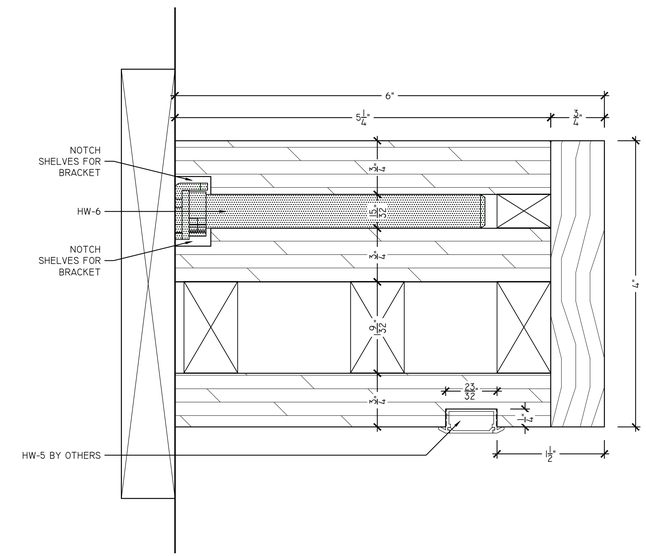

D1 BUFFET III - DETAIL
SCALE: 1'-0" = 1'-0"
ARCH REF: NONE

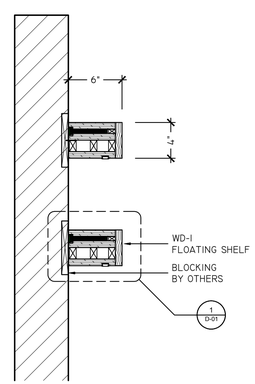

S6 BUFFET III - SECTION
SCALE: 1-1/2" = 1'-0"
ARCH REF: NONE

FINISH AND HARDWARE LEGEND

MEL-1	WHITE MELAMINE COATED PARTICLEBOARD					HW-1	PULLS - BY OTHERS	HW-4	KV8400 FULL EXTENSION DRAWER SLIDE	HW-7	GROMMET - 2"Ø
WD-1	PAINT GRADE - PRIMED					HW-2	BLUM CLIP TOP HINGE 110°	HW-5	RECESSED LIGHTING - #833.72.865		
WD-2	STAINED - PLEASE SPECIFY					HW-3	5MM METAL SHELF PIN	HW-6	FLOATING SHELF HARDWARE - #283.33.904		

SUPERIOR SHOP DRAWINGS
www.SuperiorShopDrawings.com
For Customer Review Only

SHADOW WOOD COUNTRY CLUB

22801 OAKWILDE BOULEVARD
BONITA SPRINGS, FL 34135

DATE
05/27/2019

REVISION

DRAWN BY
SSD

SCALE
AS NOTED

SHEET
5.03

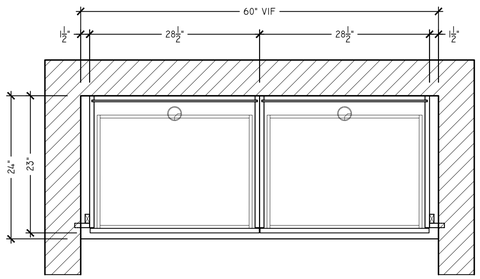

1 SERVER 103 - PLAN
SCALE: 1" = 1'-0"
ARCH REF: I/A501

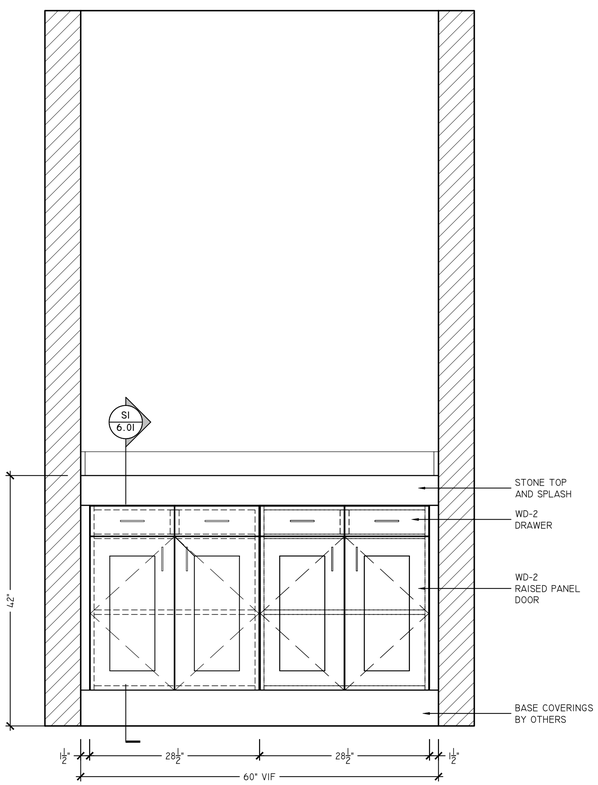

A SERVER STATION 103 - ELEVATION
SCALE: 1" = 1'-0"
ARCH REF: NONE

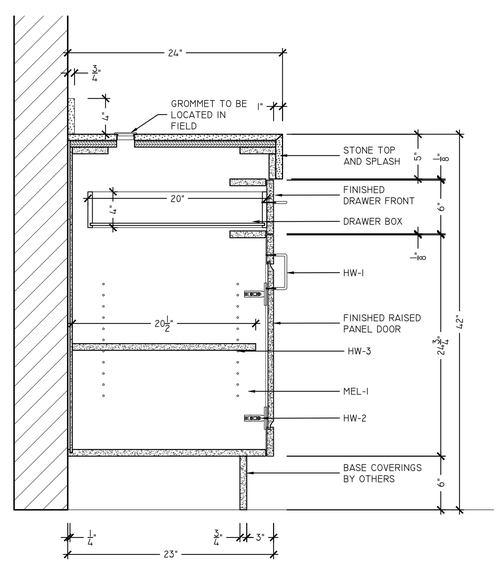

SI SERVER STATIION 103 - SECTION
SCALE: 1-1/2" = 1'-0"
ARCH REF: 2/A401

FINISH AND HARDWARE LEGEND

MEL-1	WHITE MELAMINE COATED PARTICLEBOARD					HW-1	PULLS - BY OTHERS	HW-4	KV8400 FULL EXTENSION DRAWER SLIDE	HW-7	GROMMET - 2"Ø
WD-1	PAINT GRADE - PRIMED					HW-2	BLUM CLIP TOP HINGE 110°	HW-5	RECESSED LIGHTING - #833.72.865		
WD-2	STAINED - PLEASE SPECIFY					HW-3	5MM METAL SHELF PIN	HW-6	FLOATING SHELF HARDWARE - #283.33.904		

SUPERIOR SHOP DRAWINGS
www.SuperiorShopDrawings.com
For Customer Review Only

SHADOW WOOD COUNTRY CLUB

22801 OAKWILDE BOULEVARD
BONITA SPRINGS, FL 34135

DATE
05/27/2019

REVISION

DRAWN BY
SSD

SCALE
AS NOTED

SHEET
6.01

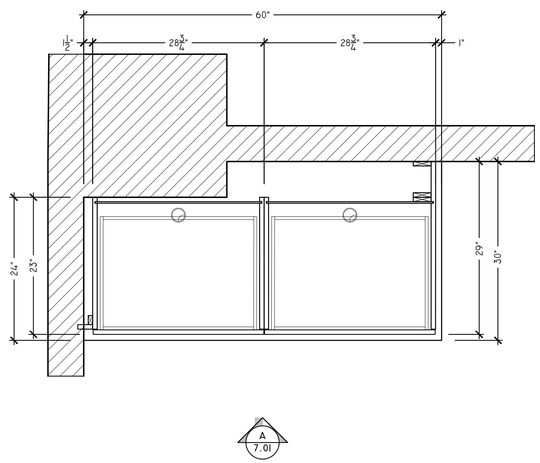

1 TECH BREAK ROOM 127 - PLAN
SCALE: 1" = 1'-0"
ARCH REF: 1/A2.6A

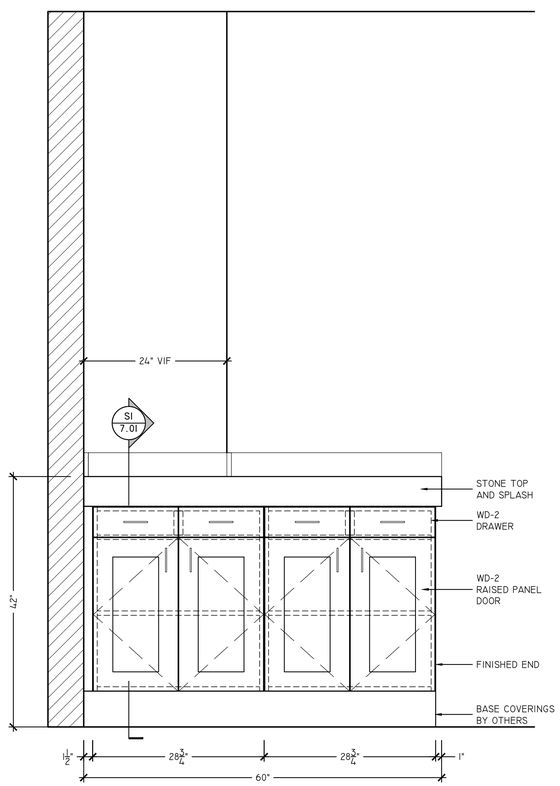

A SERVER STATION 112 - ELEVATION
SCALE: 1" = 1'-0"
ARCH REF: NONE

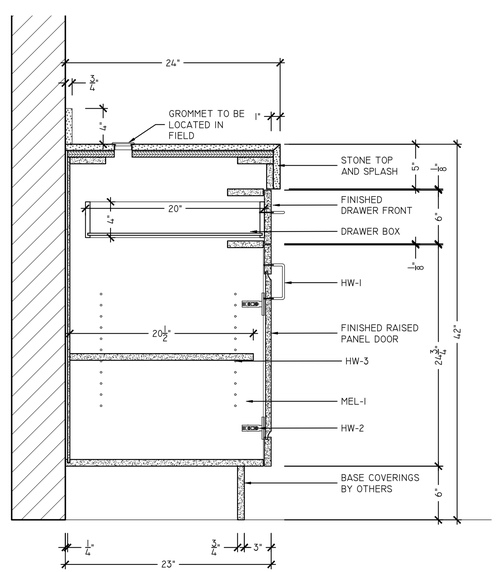

SI SERVER STATIION 103 - SECTION
SCALE: 1 1/2" = 1'-0"
ARCH REF: 3/A6.01

FINISH AND HARDWARE LEGEND

MEL-1	WHITE MELAMINE COATED PARTICLEBOARD					HW-1	PULLS - BY OTHERS	HW-4	KV8400 FULL EXTENSION DRAWER SLIDE	HW-7	GROMMET - 2"Ø
WD-1	PAINT GRADE - PRIMED					HW-2	BLUM CLIP TOP HINGE 110°	HW-5	RECESSED LIGHTING - #833.72.865		
WD-2	STAINED - PLEASE SPECIFY					HW-3	5MM METAL SHELF PIN	HW-6	FLOATING SHELF HARDWARE - #283.33.904		

SUPERIOR SHOP DRAWINGS
www.SuperiorShopDrawings.com
For Customer Review Only

SHADOW WOOD COUNTRY CLUB
22801 OAKWILDE BOULEVARD
BONITA SPRINGS, FL 34135

DATE
05/27/2019

REVISION

DRAWN BY
SSD

SCALE
AS NOTED

SHEET
7.01

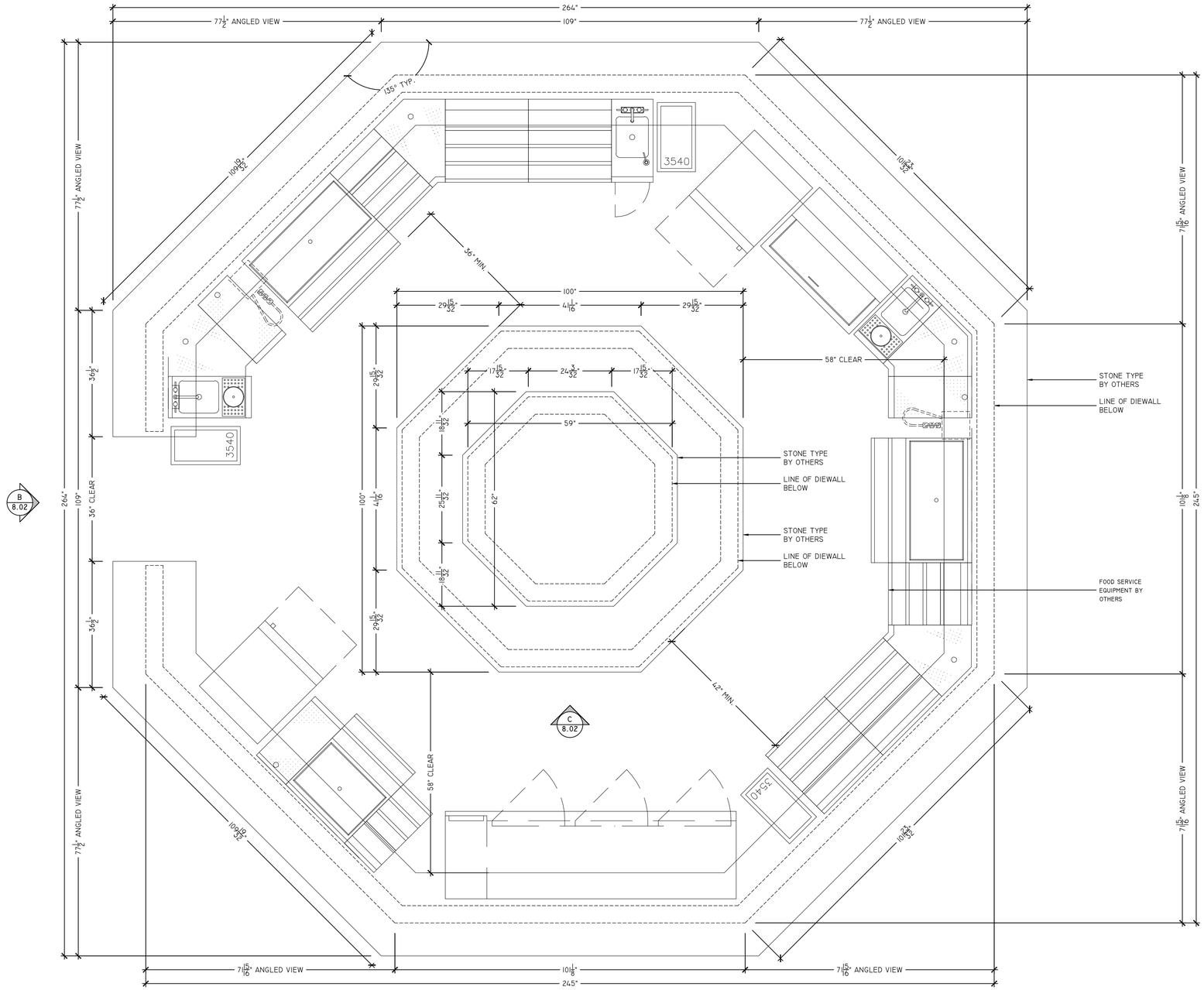

1 MAIN BAR & INNER ISLAND - PLAN
SCALE: 3/4" = 1'-0"
ARCH REF: 1/A-502

FINISH AND HARDWARE LEGEND

MEL-1	WHITE MELAMINE COATED PARTICLEBOARD					HW-1	PULLS - BY OTHERS	HW-4	KV8400 FULL EXTENSION DRAWER SLIDE	HW-7	GROMMET - 2"Ø
WD-1	PAINT GRADE - PRIMED					HW-2	BLUM CLIP TOP HINGE 110°	HW-5	RECESSED LIGHTING - #833.72.865		
WD-2	STAINED - PLEASE SPECIFY					HW-3	5MM METAL SHELF PIN	HW-6	FLOATING SHELF HARDWARE - #283.33.904		

SUPERIOR SHOP DRAWINGS
www.SuperiorShopDrawings.com
For Customer Review Only

SHADOW WOOD COUNTRY CLUB

22801 OAKWILDE BOULEVARD
BONITA SPRINGS, FL 34135

DATE
05/27/2019

REVISION

DRAWN BY
SSD

SCALE
AS NOTED

SHEET
8.01

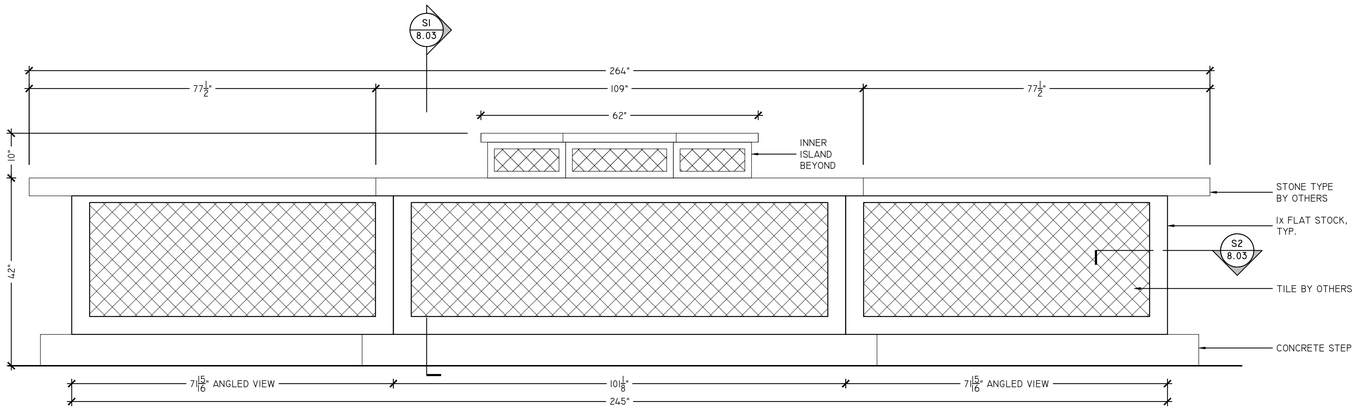

A MAIN BAR - ELEVATION
SCALE: 3/4" = 1'-0"
ARCH REF: 7/1-401

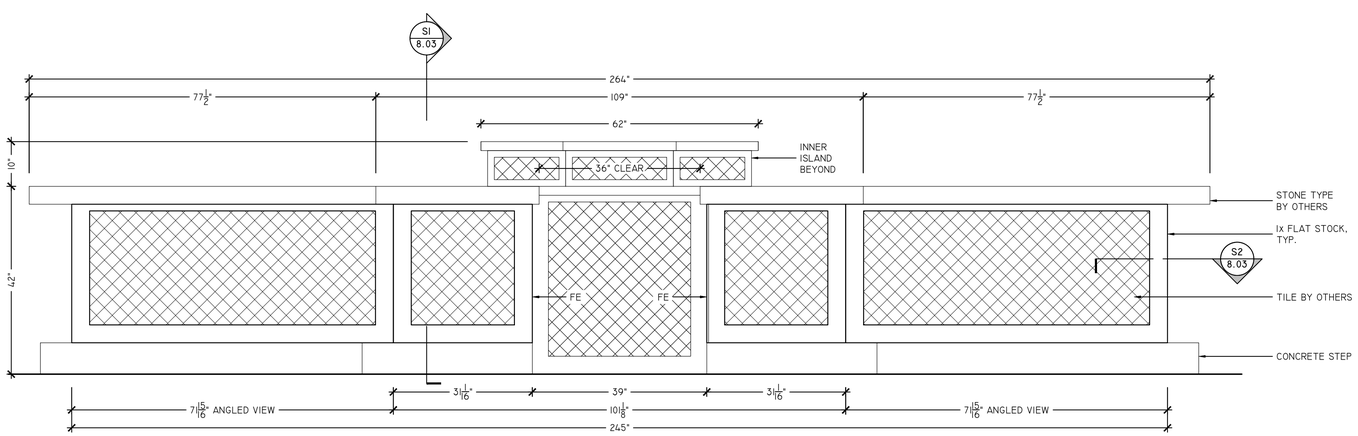

B MAIN BAR - ELEVATION
SCALE: 3/4" = 1'-0"
ARCH REF: 7/1-401 (SIMI.)

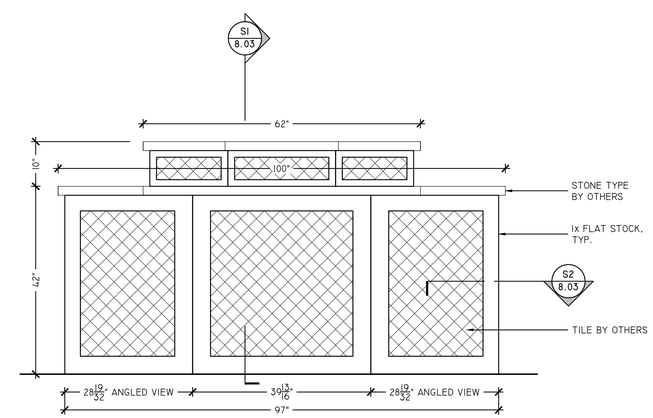

C INNER ISLAND - ELEVATION
SCALE: 3/4" = 1'-0"
ARCH REF: N/A

FINISH AND HARDWARE LEGEND

MEL-1	WHITE MELAMINE COATED PARTICLEBOARD					HW-1	PULLS - BY OTHERS	HW-4	KV8400 FULL EXTENSION DRAWER SLIDE	HW-7	GROMMET - 2"Ø
WD-1	PAINT GRADE - PRIMED					HW-2	BLUM CLIP TOP HINGE 110°	HW-5	RECESSED LIGHTING - #833.72.865		
WD-2	STAINED - PLEASE SPECIFY					HW-3	5MM METAL SHELF PIN	HW-6	FLOATING SHELF HARDWARE - #283.33.904		

SUPERIOR SHOP DRAWINGS
www.SuperiorShopDrawings.com
For Customer Review Only

SHADOW WOOD COUNTRY CLUB
22801 OAKWILDE BOULEVARD
BONITA SPRINGS, FL 34135

DATE
05/27/2019

REVISION

DRAWN BY
SSD

SCALE
AS NOTED

SHEET
8.02

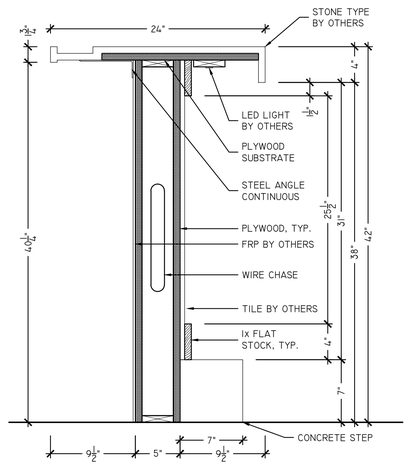

S1 MAIN BAR - SECTION
SCALE: 1-1/2" = 1'-0"
ARCH REF: U1-401

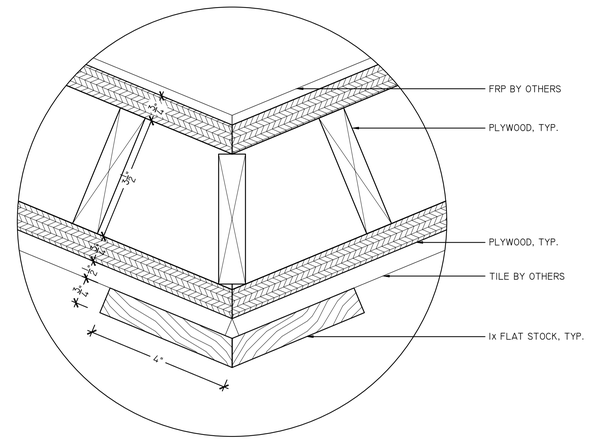

S2 MAIN BAR - SECTION
SCALE: 1-1/2" = 1'-0"
ARCH REF: U1-401

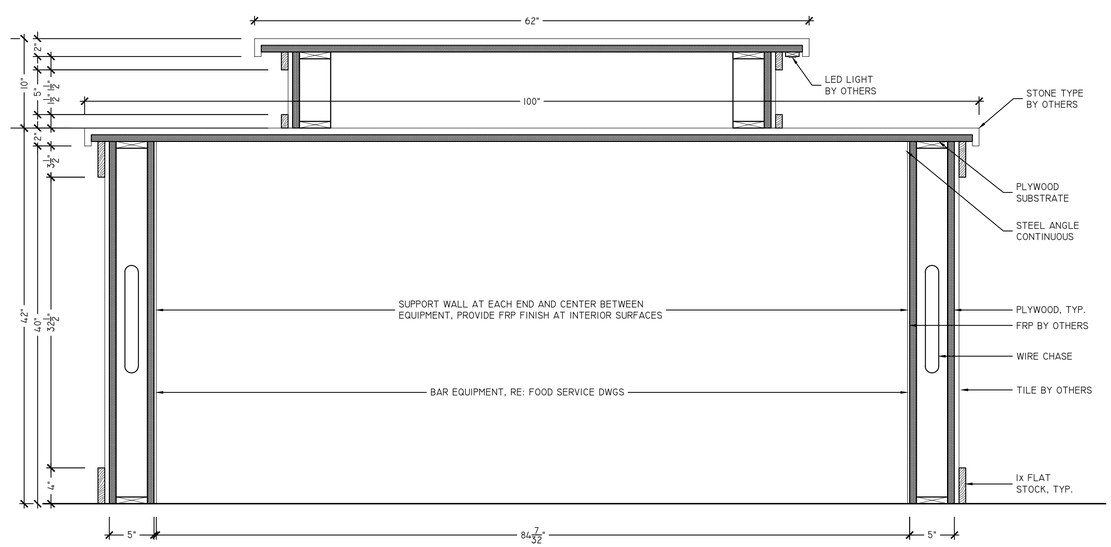

S3 INNER ISLAND - SECTION
SCALE: 1-1/2" = 1'-0"
ARCH REF: S1-401

FINISH AND HARDWARE LEGEND

MEL-1	WHITE MELAMINE COATED PARTICLEBOARD					HW-1	PULLS - BY OTHERS	HW-4	KV8400 FULL EXTENSION DRAWER SLIDE	HW-7	GROMMET - 2"Ø
WD-1	PAINT GRADE - PRIMED					HW-2	BLUM CLIP TOP HINGE 110°	HW-5	RECESSED LIGHTING - #833.72.865		
WD-2	STAINED - PLEASE SPECIFY					HW-3	5MM METAL SHELF PIN	HW-6	FLOATING SHELF HARDWARE - #283.33.904		

SUPERIOR SHOP DRAWINGS
www.SuperiorShopDrawings.com
For Customer Review Only

SHADOW WOOD COUNTRY CLUB
22801 OAKWILDE BOULEVARD
BONITA SPRINGS, FL 34135

DATE
05/27/2019

REVISION

DRAWN BY
SSD

SCALE
AS NOTED

SHEET
8.03

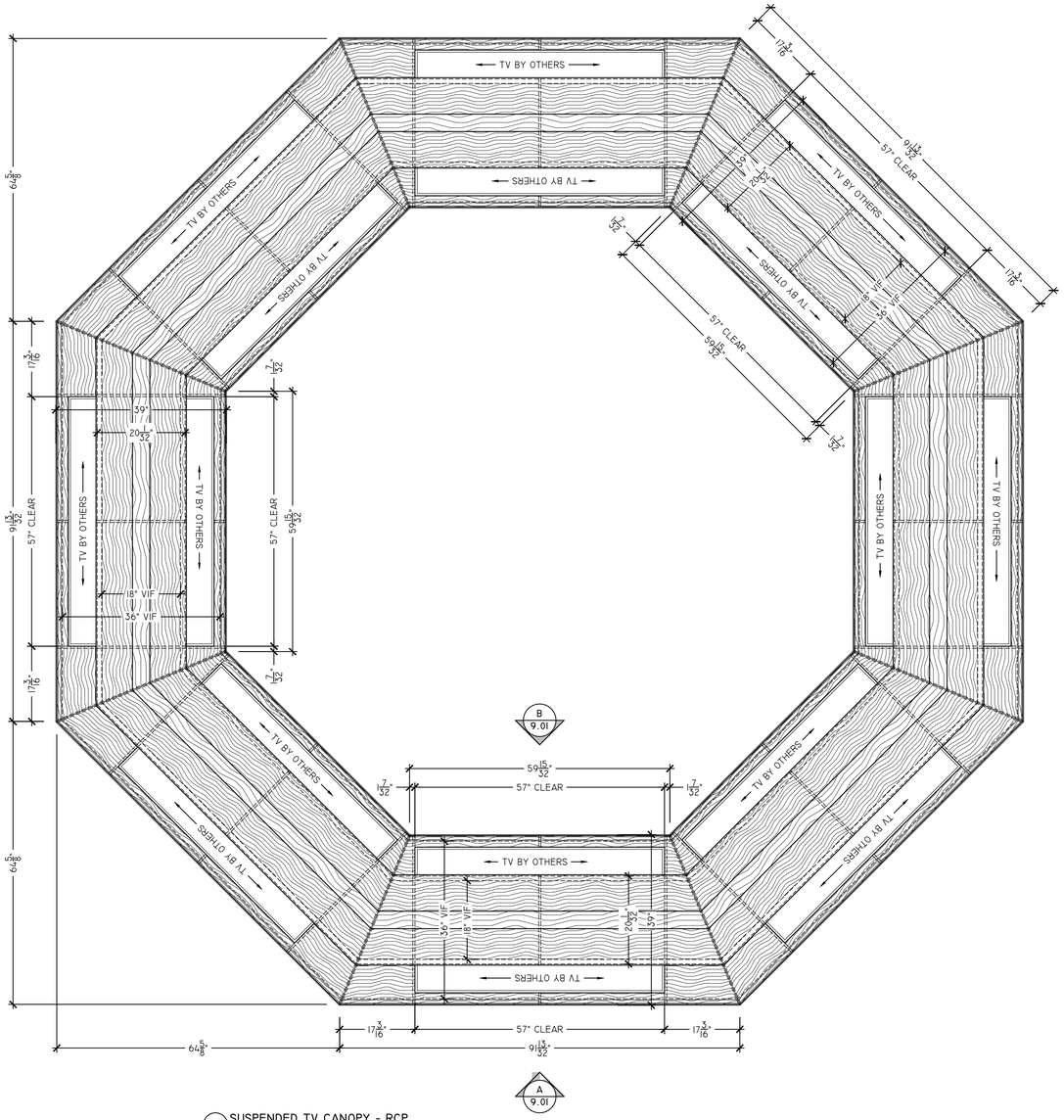

1 SUSPENDED TV CANOPY - RCP
SCALE: 3/4" = 1'-0"
ARCH REF: 1/A-602

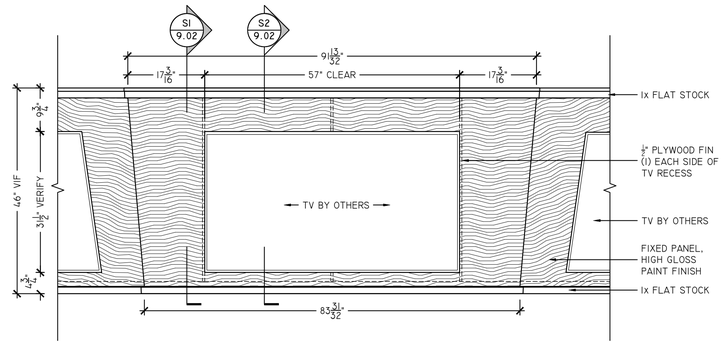

A SUSPENDED TV CANOPY - ELEVATION
SCALE: 3/4" = 1'-0"
ARCH REF: 1/A-602

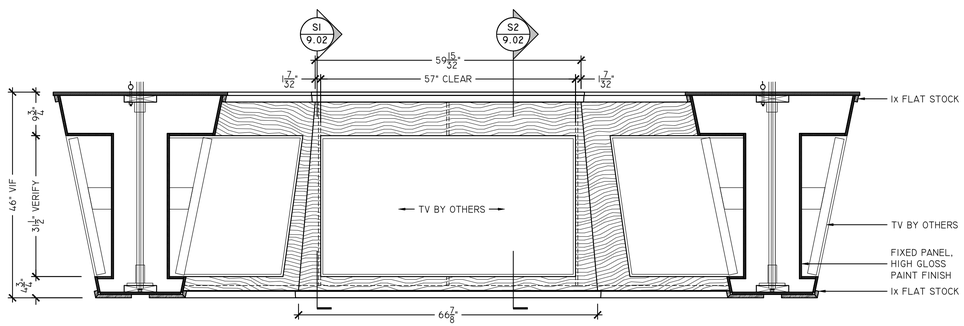

B SUSPENDED TV CANOPY - ELEVATION
SCALE: 3/4" = 1'-0"
ARCH REF: 1/A-602

SUPERIOR SHOP DRAWINGS
www.SuperiorShopDrawings.com
For Customer Review Only

SHADOW WOOD COUNTRY CLUB

22801 OAKWILDE BOULEVARD
BONITA SPRINGS, FL 34135

DATE
05/27/2019

REVISION

DRAWN BY
SSD

SCALE
AS NOTED

SHEET
9.01

FINISH AND HARDWARE LEGEND

MEL-1	WHITE MELAMINE COATED PARTICLEBOARD					HW-1	PULLS - BY OTHERS	HW-4	KV8400 FULL EXTENSION DRAWER SLIDE	HW-7	GROMMET - 2"Ø
WD-1	PAINT GRADE - PRIMED					HW-2	BLUM CLIP TOP HINGE 110°	HW-5	RECESSED LIGHTING - #833.72.865		
WD-2	STAINED - PLEASE SPECIFY					HW-3	5MM METAL SHELF PIN	HW-6	FLOATING SHELF HARDWARE - #283.33.904		

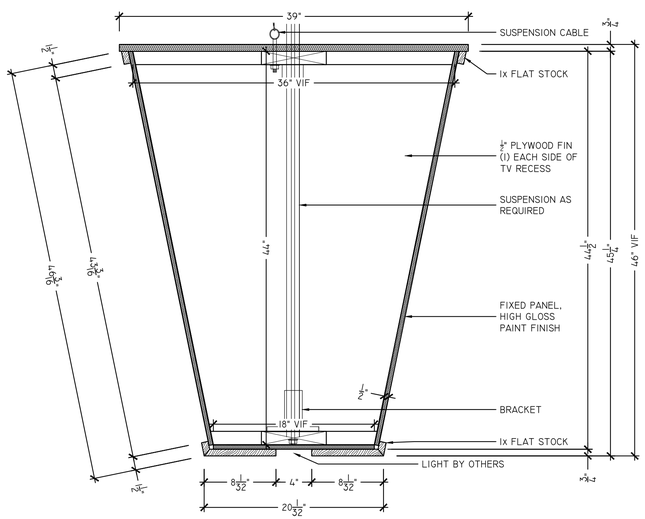

S1 SUSPENDED TV CANOPY - SECTION
SCALE: 6" = 1'-0"
ARCH REF: 15/A-904

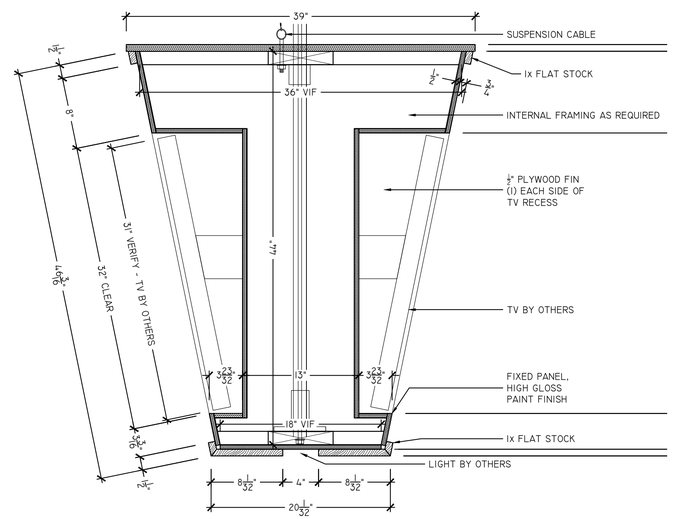

S2 SUSPENDED TV CANOPY - SECTION
SCALE: 6" = 1'-0"
ARCH REF: 9/A-904

FINISH AND HARDWARE LEGEND

MEL-1	WHITE MELAMINE COATED PARTICLEBOARD					HW-1	PULLS - BY OTHERS	HW-4	KV8400 FULL EXTENSION DRAWER SLIDE	HW-7	GROMMET - 2"Ø
WD-1	PAINT GRADE - PRIMED					HW-2	BLUM CLIP TOP HINGE 110°	HW-5	RECESSED LIGHTING - #833.72.865		
WD-2	STAINED - PLEASE SPECIFY					HW-3	5MM METAL SHELF PIN	HW-6	FLOATING SHELF HARDWARE - #283.33.904		

SUPERIOR SHOP DRAWINGS
www.SuperiorShopDrawings.com
For Customer Review Only

SHADOW WOOD COUNTRY CLUB

22801 OAKWILDE BOULEVARD
BONITA SPRINGS, FL 34135

DATE
05/27/2019

REVISION

DRAWN BY
SSD

SCALE
AS NOTED

SHEET
9.02

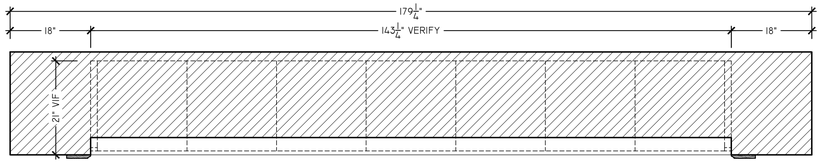

1 TELEVISION WALL - PLAN
SCALE: 3/4" = 1'-0"
ARCH REF: 1/1-101

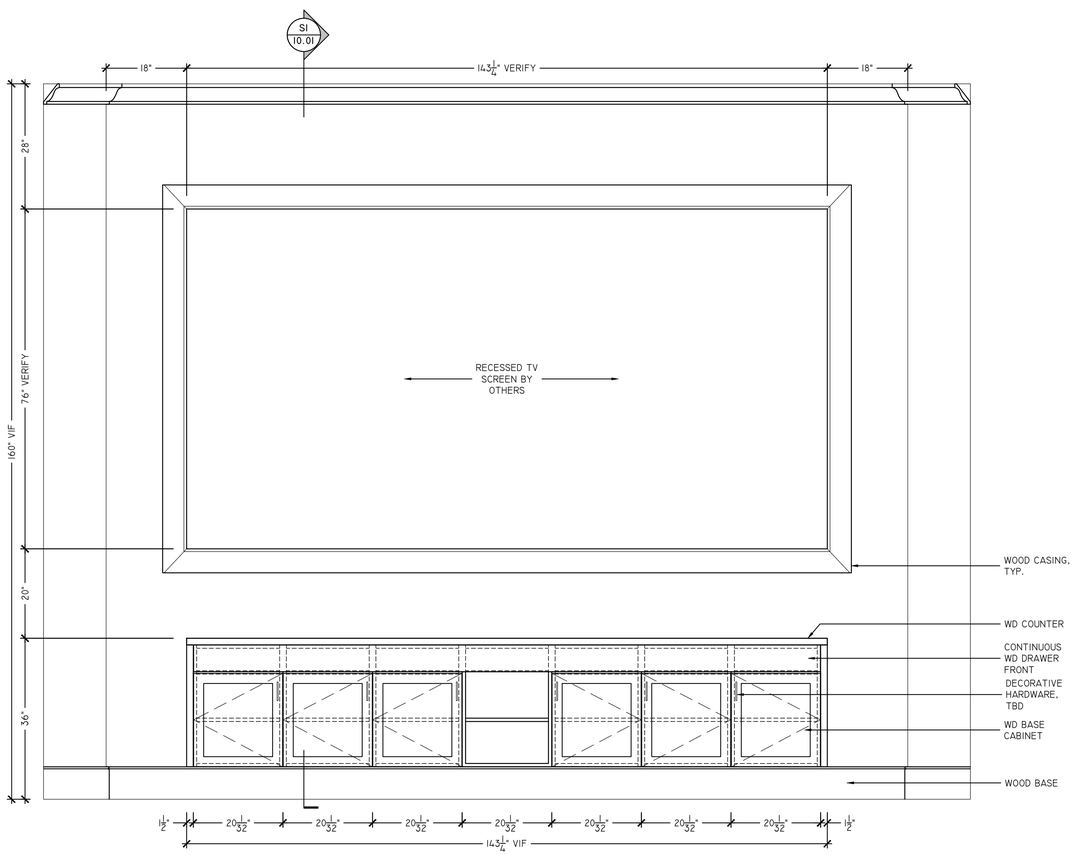

A TELEVISION WALL - ELEVATION
SCALE: 3/4" = 1'-0"
ARCH REF: 4/1-202

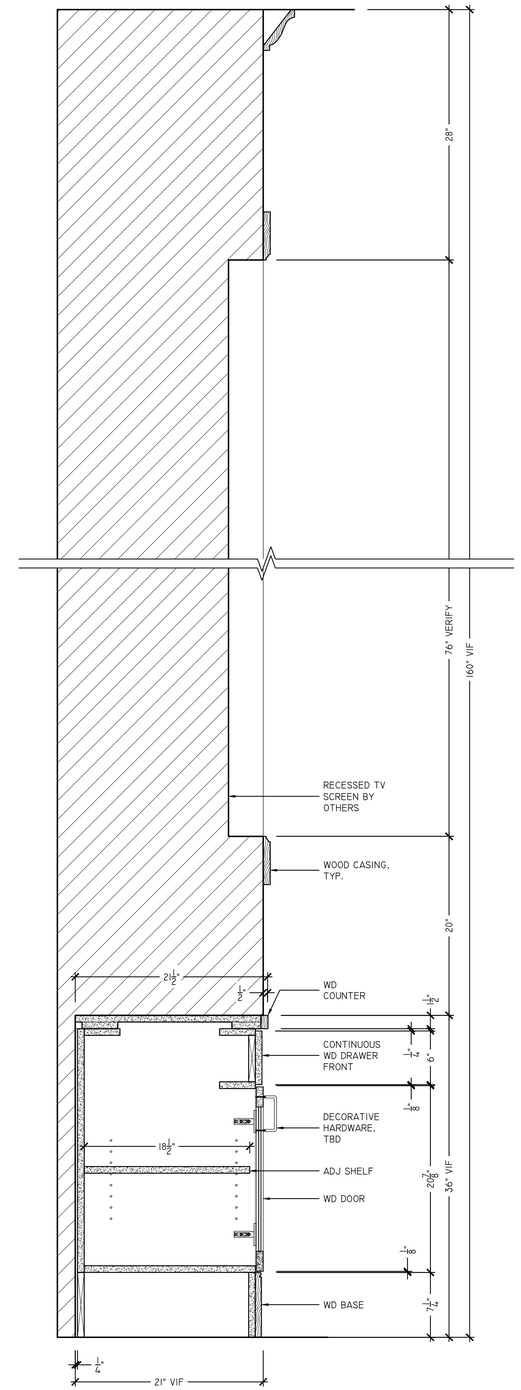

S1 TELEVISION WALL - SECTION
SCALE: 6" = 1'-0"
ARCH REF: 4/1-401

SUPERIOR SHOP DRAWINGS
www.SuperiorShopDrawings.com
For Customer Review Only

SHADOW WOOD COUNTRY CLUB

22801 OAKWILDE BOULEVARD
BONITA SPRINGS, FL 34135

DATE
05/27/2019

REVISION

DRAWN BY
SSD

SCALE
AS NOTED

SHEET
10.01

FINISH AND HARDWARE LEGEND

MEL-1	WHITE MELAMINE COATED PARTICLEBOARD					HW-1	PULLS - BY OTHERS	HW-4	KV8400 FULL EXTENSION DRAWER SLIDE	HW-7	GROMMET - 2"Ø
WD-1	PAINT GRADE - PRIMED					HW-2	BLUM CLIP TOP HINGE 110°	HW-5	RECESSED LIGHTING - #833.72.865		
WD-2	STAINED - PLEASE SPECIFY					HW-3	5MM METAL SHELF PIN	HW-6	FLOATING SHELF HARDWARE - #283.33.904		